ANEJOS

ESTUDIO Y VIABILIDAD DE PRODUCCIÓN DE HIDRÓGENO VERDE A PARTIR DE UN MIX ENERGÉTICO RENOVABLE PARA DESCARBONIZACIÓN DE FLOTA DE AUTOBUSES URBANOS EN VALLADOLID



AUTORES:

PATRICIA LÓPEZ VILLALBA

DANIEL CARBONELL GALLARDO

IVÁN GARCÍA RIESGO

MARTA GARCÍA CUARTERO

DIEGO CASTILLO RODRÍGUEZ

TUTOR:

ALEJANDRO LARA HIDALGO

Anejo Nº 1

Ficha Técnica del Autobús de Hidrógeno Toyota Caetano H2 Citygold

ESTUDIO Y VIABILIDAD DE PRODUCCIÓN DE HIDRÓGENO VERDE A PARTIR DE UN MIX ENERGÉTICO RENOVABLE PARA DESCARBONIZACIÓN DE FLOTA DE AUTOBUSES URBANOS EN VALLADOLID



H2.City Gold

el autobús de hidrógeno para su ciudad

CAETANO

With your city, with your vision



SOÑEMOS CON EL FUTURO

Queremos mejorar el transporte urbano y garantizar un futuro mejor para la población de las ciudades.

Las redes urbanas exigen medios de transporte más ecológicos, seguros y económicamente sostenibles. Trabajamos constantemente para armonizar nuestro crecimiento con la sostenibilidad urbana y construir el futuro de las ciudades con nuestros socios.
Esta es nuestra contribución a un futuro diseñado con soluciones de movilidad sin carbono en todo el mundo.

CON SOLUCIONES DE MOVILIDAD SOSTENIBLES

Dimos los primeros pasos en el desarrollo de soluciones de movilidad eléctrica hace más de 40 años. Nuestros conocimientos adquiridos nos permiten tener hoy una oferta consolidada de soluciones integradas para ciudades y aeropuertos más ecológicos.

Con más de 70 años de existencia, unimos a diario nuestra experiencia con nuestra pasión, en el desarrollo de soluciones innovadoras y más sostenibles.

Seguiremos soñando y creando el futuro en el queremos vivir.

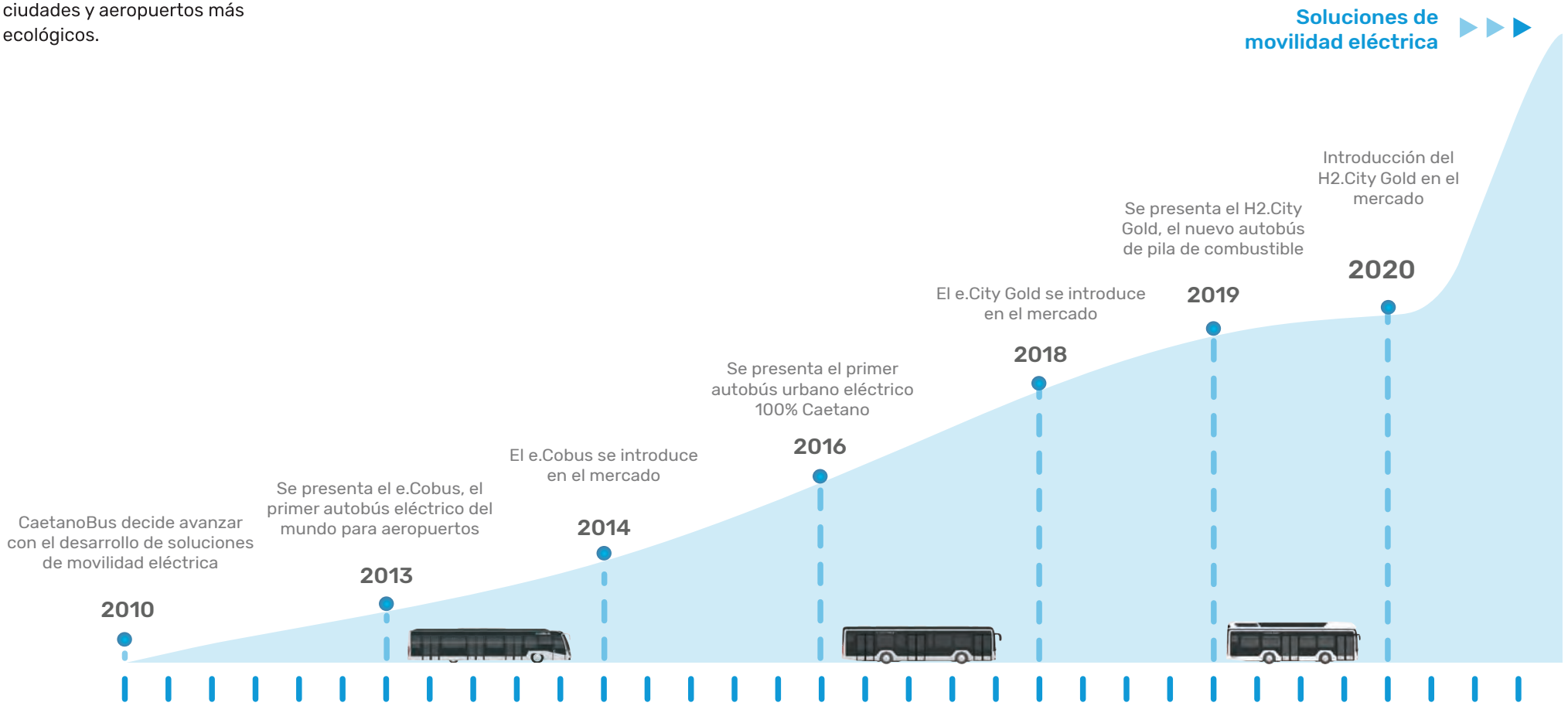

H2.CITY GOLD

El autobús Caetano con pilas de combustible de hidrógeno.

El Caetano H2.City Gold es el nuevo autobús eléctrico Caetano impulsado por hidrógeno. Esta es una solución innovadora, que potencia los beneficios económicos y medioambientales del hidrógeno avanzando hacia una sociedad sin carbono.
De este modo, damos un paso importante en el desarrollo de soluciones de movilidad para el transporte colectivo de pasajeros con cero emisiones.

El H2.City Gold se destaca por su modularidad, autonomía y alta capacidad, seguridad y simplicidad de uso. Disponible en las versiones LHD y RHD, con 2 o 3 puertas, se adapta fácilmente a cualquier entorno urbano.

Este nuevo autobús refuerza nuestra apuesta por el desarrollo de soluciones de transporte ecológicas, y complementa la oferta de autobuses eléctricos Caetano. El H2.City Gold ofrece una mayor flexibilidad en el funcionamiento, dado que no existe la necesidad de parar para la carga en el caso de viajes más largos. Además, posee un mejor rendimiento a la hora de eliminar las emisiones gaseosas nocivas, en comparación con los autobuses diésel o incluso con los autobuses híbridos.

AUTONOMÍA DE HASTA 400 KM
FÁCIL UTILIZACIÓN
GRAN CAPACIDAD

CERO EMISIONES

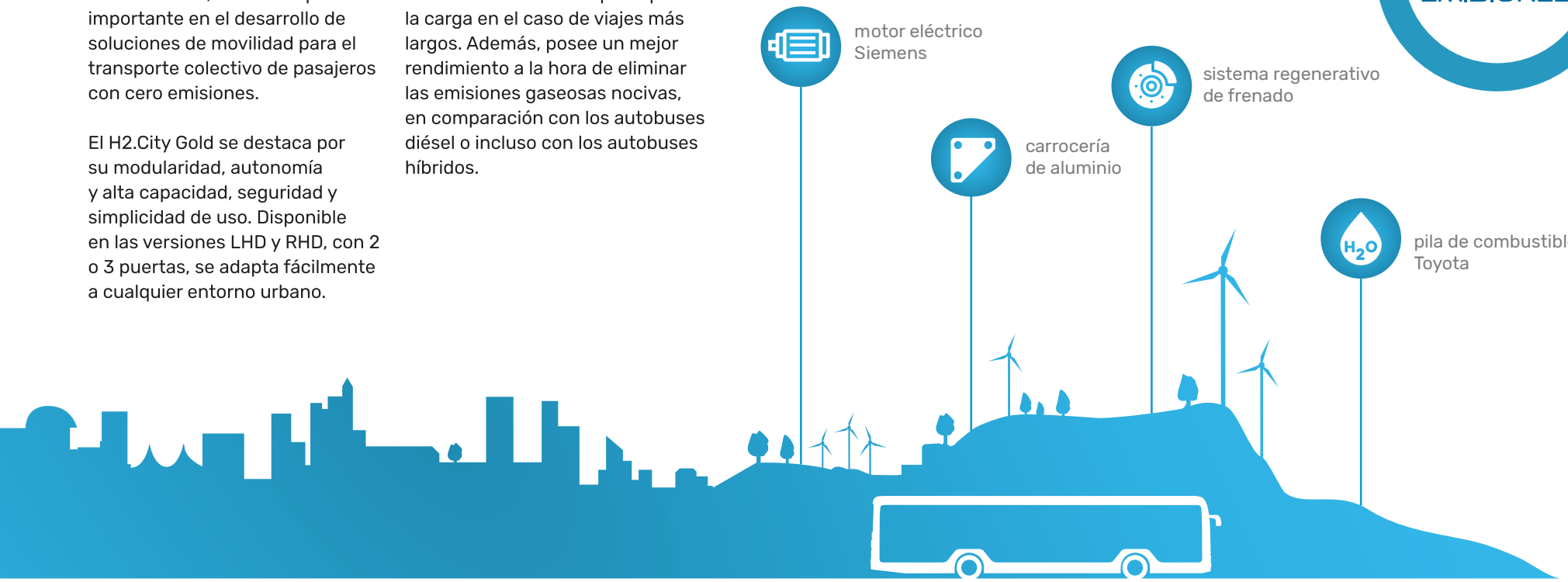


CAETANO
CAETANO

LA TECNOLOGÍA DE NUESTRO CHASIS

El sistema modular del chasis Caetano permite al H2.City Gold tener diferentes configuraciones, optimizando la versatilidad de sus especificaciones.

Modularidad de piso bajo o entrada baja

2 o 3 puertas

LHD o RHD

Detección y extinción de incendios

Sistema que detecta y apaga un incendio en los compartimentos del motor y de las baterías.

Sistema de control antideslizante (ASR)

Controla el sistema de tracción para evitar que las ruedas patinen cuando la carretera está resbaladiza, o por exceso de aceleración del vehículo.

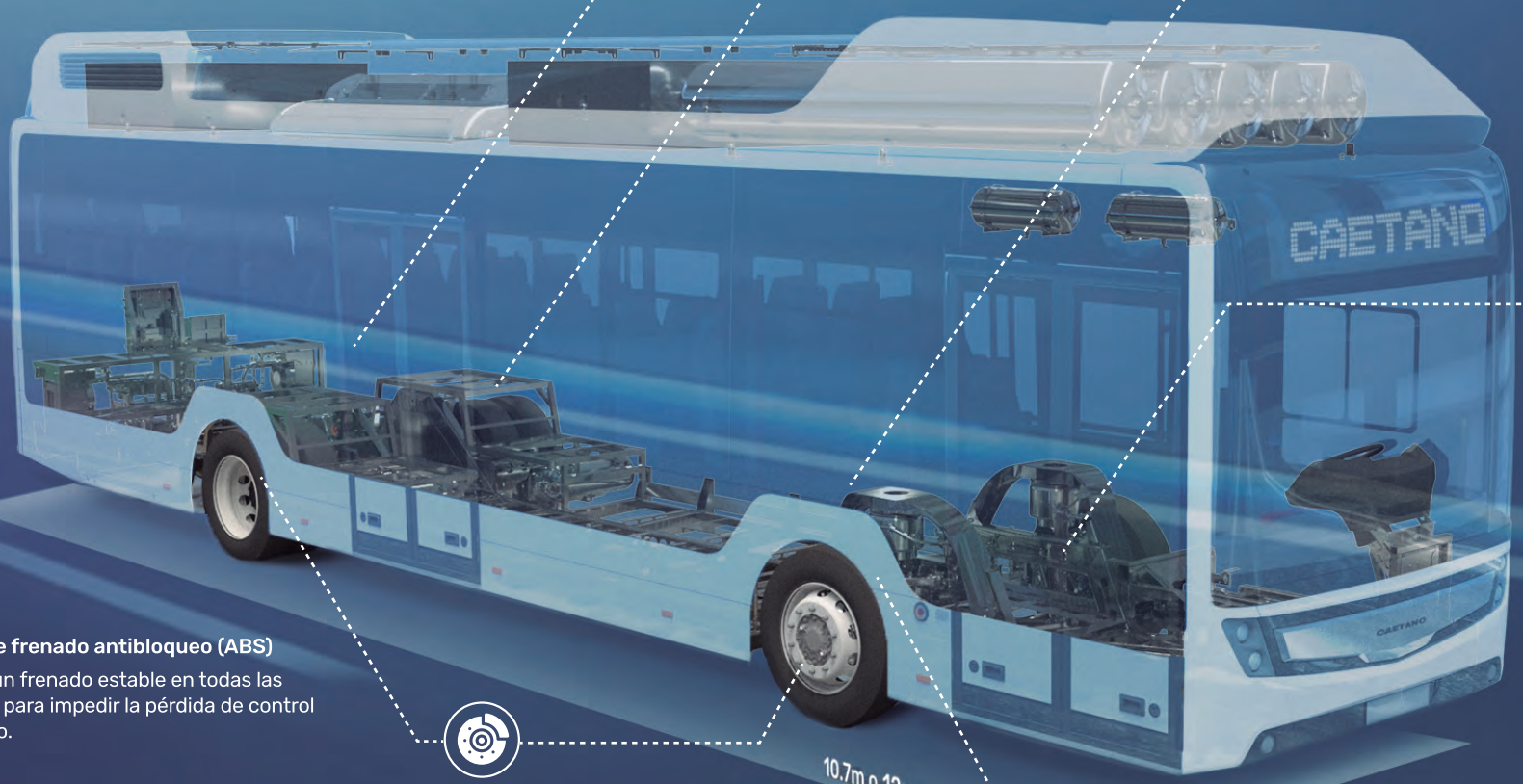

Control electrónico de estabilidad (ESC)

Una tecnología que mejora la estabilidad del vehículo mediante la detección y reducción de la pérdida de tracción.

Hill holder

Ayuda en el arranque en rampas, manteniendo el vehículo parado durante algunos segundos, incluso sin pisar el pedal de freno.

Sistema de frenado antibloqueo (ABS)

Garantiza un frenado estable en todas las superficies para impedir la pérdida de control del vehículo.

Sistema de frenado electrónico (EBS)

Lee la información de todos los sensores de frenado y activa el ABS o el ASR cuando es necesario.

Suspensión neumática controlada electrónicamente (ECAS)

Asegura una mayor estabilidad y distribución del peso, ofrece más seguridad y reduce el tiempo y los costes de funcionamiento, ya que facilita la entrada y salida de pasajeros.

Complementos de seguridad:

- Detector de fatiga del conductor (DFW)
- Alerta de salida involuntaria de carril (LDW)
- Sensor de ángulo muerto
- Advertencia de colisión (FXW y PCW)
- Sistema de control de la presión de los neumáticos (TPMS)
- Control electrónico de estabilidad (ESC)
- Control de la distancia de seguridad (HMW)
- Indicador de límite de velocidad (SLI)
- Alerta sonora de marcha atrás (white sound)
- Sistema inteligente de velocidad (ISA)
- Señal acústica de pedal
- Cámara en la zona de los pedales
- Indicador luminoso de utilización del pedal
- Sistemas de supervisión por cámaras para la sustitución de espejos con visión nocturna (CMS)
- Alcoholímetro con inmovilizador del vehículo
- CCTV
- Sensor de aparcamiento

Siempre conectado

Un funcionamiento eficiente se apoya en datos que asumen decisiones acertadas para una planificación adecuada. El H2.City Gold posee un sistema de envío de información detallada en tiempo real a una plataforma propia. Esto permite recibir alertas de desvíos de la planificación, obtener estadísticas del rendimiento del vehículo, previsiones de autonomía, ver detalles del consumo de energía y mucho más. De este modo, está siempre disponible una visión completa del funcionamiento para que esta sea lo más eficaz posible.

Seguridad por encima de todo

Cumplimos con los diferentes requisitos de seguridad para que tanto el conductor como los pasajeros puedan viajar seguros. Además de los sistemas de seguridad estándar, los vehículos pueden equiparse con una amplia gama de opciones, en función de las exigencias de cada uno de nuestros clientes.
El H2.City Gold está también dotado de sensores de detección de hidrógeno y sensores de colisión que, en caso de fuga o accidente, cortan la salida del flujo de hidrógeno de los tanques.

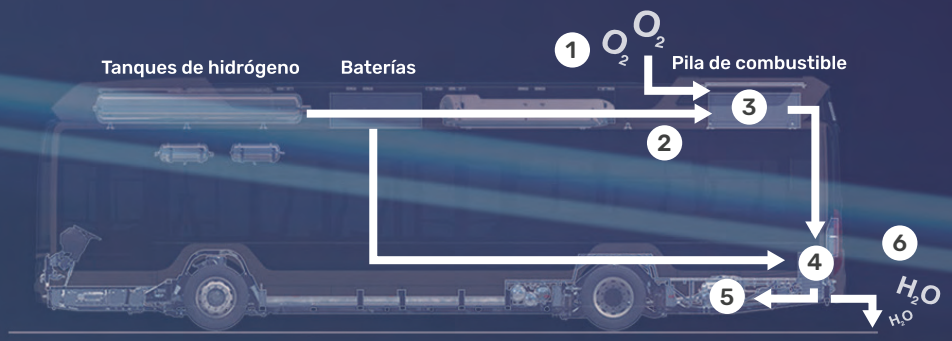

1. Se absorbe el oxígeno
2. Se suministra oxígeno e hidrógeno a la pila de combustible
3. La electricidad y el agua se gener an por reacción química
4. La electricidad se suministra al motor y sistemas auxiliares.
5. El motor se activa y el vehículo se mueve
6. Se bombea agua

60 kW
Pila de combustible Toyota

180 kW
Motor Siemens

29-44 kWh
Baterías LTO

9 minutos *
Suministro rápido

** estimado*



Confort y accesibilidad para todos

El H2.City Gold ofrece un alto nivel de confort y accesibilidad a sus pasajeros. Las baterías, los tanques de hidrógeno y la pila de combustible ubicados en el techo optimizan el espacio interior, haciéndolo más amplio.
De esta forma el H2.City Gold permite que se puedan elegir diferentes distribuciones en su interior, ofreciendo una gran capacidad. Al mismo tiempo, se puede elegir la ubicación de la rampa de acceso en cualquiera de las puertas, delantera y central, que refuerza la inclusividad de todos los pasajeros.

Es un placer conducirlo

El asiento del conductor ha sido diseñado de conformidad con las normas de ergonomía más recientes (VDV 234 e ISO 16121), pensando en quien lo utiliza todos los días, para optimizar el confort y reducir el cansancio. El tablero de instrumentos ajustable simplifica el uso de todos los mandos y la información personalizable se adapta a las necesidades de utilización. El asiento permite un fácil acceso a los pedales, que garantiza una experiencia de conducción cómoda, ágil y suave.

Fácil e intuitivo

El H2.City Gold es definitivamente un vehículo ecológico, diseñado para ofrecer una experiencia agradable desde el primer momento.
Las semejanzas con un vehículo convencional permiten una adaptación fácil, por lo que conducir el H2.City Gold es una experiencia placentera.
Los equipos de mantenimiento también tienen simplificado su trabajo, ya que las piezas principales están ubicadas de forma estratégica para garantizar su fácil acceso. Puesto que el hidrógeno es una partícula bastante ligera y no visible, es importante crear herramientas de asistencia para los equipos de mantenimiento. De este modo, a través de la utilización de una cinta que cambia de color al entrar en contacto con las partículas de hidrógeno, se puede llevar a cabo fácilmente un control visual de una posible fuga, reduciendo así los tiempos de inspección y mantenimiento.

Ecológico en todos los aspectos

La fabricación del H2.City Gold se realiza con materiales ecológicos y reciclables. Buscamos constantemente la posibilidad de utilizar nuevos materiales y técnicas que permitan que nuestros autobuses sean cada vez más sostenibles.





El silencio también se hace oír

En los centros urbanos la mayoría de las veces el ruido es ensordecedor. Este ruido no es solo incómodo, sino que también trae consigo problemas para la salud. Crear zonas urbanas más tranquilas es también un objetivo común en el horizonte de las ciudades del futuro.
El H2.City Gold, con niveles de ruido reducido, contribuye de esta forma para lograr ciudades más agradables.

Ciudades más tranquilas y silenciosas.

SOLUCIONES e.MOBILITY

Socio en la definición del producto y del modelo de servicio

CaetanoBus es un proveedor de soluciones de movilidad integrales. Apoyamos cada operación desde el principio hasta el final, diseñamos soluciones adaptadas a cada cliente según sus necesidades, y ofrecemos una amplia variedad de servicios que permiten crear, gestionar y optimizar soluciones de transporte ecológicas.



CONSULTORÍA EN e.MOBILITY

- Análisis energético de líneas
- Soluciones de carga e infraestructuras
- Estudio de consumo energético y costes de funcionamiento
- Soluciones de financiación

DISEÑO Y PERSONALIZACIÓN

- Previsión de escenarios de funcionamiento
- Presentación del proyecto de movilidad de conformidad con las especificaciones del funcionamiento

DESARROLLO TECNOLÓGICO

- Diseño de soluciones basadas en las innovaciones tecnológicas más recientes, así como desarrollo de nuevas funcionalidades, si fuera necesario

FABRICACIÓN

- Materialización del proyecto, integrando la capacidad industrial y un amplio conocimiento

IMPLEMENTACIÓN Y FUNCIONAMIENTO

- Formación
- Gestión de flota
- Información en tiempo real
- Optimización del rendimiento de los vehículos

POSTVENTA

- Asistencia técnica
- Servicio de atención al cliente

LHD y RHD 10.7m*



LHD y RHD 12m*



Grupo propulsor	Motor - 180 kW - Siemens (síncrono de imanes permanentes) Transmisión - directa al eje (sin caja de cambios)	
Baterías	LTO (óxido de litio-titanato)	
Sistema de pila de combustible	Tanques de hidrógeno - tipo 4 de composite: 5 x 3121 (máx. 37,5kg: 350 bar)	
	Tipo de suministro - < 9 min (de acuerdo con SAE 32601-2 & SAE 32799 - IR]	
	Potencia nominal de la pila de combustible - 60 kW (Toyota FC Stack)	
	Arranque en frío - desde - 25 °C sin energía externa - opcional	
Autonomía estimada	Hasta 400 km	
Consumo estimado	Desde 6 kg/100 km	
Sistema de frenado	Sistema de frenado electroneumático (WABCO EBS 3), ABS con sistema de frenado regenerativo (ASR) Sistema electrónico de estabilidad (ESC) - opcional	
Chasis	Chasis de piso bajo de acero de alta resistencia	
Ejes	Eje delantero - Suspensión independiente ZF RL 82 EC	
	Eje trasero - Eje motor tipo pórtico rebajado para autobuses de piso bajo	
Suspensión	ECAS 2 - Suspensión neumática controlada electrónicamente	
	Sistema de inclinación (kneeling)	
	Accionamiento manual y automático de subida y bajada de la carrocería	
Carrocería	Carrocería de aluminio con sistema CO-BOLT	
Capacidad	Hasta 64 pasajeros	Hasta 87 pasajeros
Puertas	2 o 3 puertas	

** El fabricante se reserva el derecho de modificar las especificaciones del vehículo.*

CaetanoBus



IMAGINE SU CIUDAD CON NOSOTROS.

En CaetanoBus, desarrollamos soluciones innovadoras y más sostenibles, para transformar ciudades y mejorar la calidad de vida en las mismas.

¡CONTÁCTENOS!

SEDE CENTRAL CAETANOBUS

Av. Vasco da Gama, 1410
4430-247 – Vila Nova de Gaia
PORTUGAL
GPS: 41°06'52.78''N 8°35'31,62''W

Tel.: +351 22 786 70 00
Fax: +351 22 786 71 71

Correo electrónico: caetanobus@caetanobus.pt

www.caetanobus.pt

Elaborado para:

ITXPT

Anejo Nº 2

Emplazamientos de las Instalaciones

ESTUDIO Y VIABILIDAD DE PRODUCCIÓN DE HIDRÓGENO VERDE A PARTIR DE UN MIX ENERGÉTICO RENOVABLE PARA DESCARBONIZACIÓN DE FLOTA DE AUTOBUSES URBANOS EN VALLADOLID



ESTUDIO Y VIABILIDAD DE PRODUCCIÓN DE HIDRÓGENO VERDE A PARTIR DE UN MIX ENERGÉTICO RENOVABLE PARA DESCARBONIZACIÓN DE FLOTA DE AUTOBUSES URBANOS EN VALLADOLID	FECHA: OCTUBRE 2025 ESCALA: 1/120000	Universidad Europea	PATRICIA LÓPEZ VILLALBA DANIEL CARBONELL GALLARDO IVÁN GARCÍA RIESGO MARTA GARCÍA CUARTERO DIEGO CASTILLO RODRÍGUEZ	Nº PLANO: 1	TÍTULO PLANO: EMPLAZAMIENTO

COORDENADAS UTM ETRS89	
X	Y
341823	4636618

LEYENDA

- Posición aerogenerador

ESTUDIO Y VIABILIDAD DE PRODUCCIÓN DE HIDRÓGENO VERDE A PARTIR DE UN MIX ENERGÉTICO RENOVABLE PARA DESCARBONIZACIÓN DE FLOTA DE AUTOBUSES URBANOS EN VALLADOLID	FECHA: OCTUBRE 2025 ESCALA: 1/10000	Universidad Europea	PATRICIA LÓPEZ VILLALBA DANIEL CARBONELL GALLARDO IVÁN GARCÍA RIESGO MARTA GARCÍA CUARTERO DIEGO CASTILLO RODRÍGUEZ	Nº PLANO: 2	TÍTULO PLANO: UBICACIÓN AEROGENERADOR



ESTUDIO Y VIABILIDAD DE PRODUCCIÓN DE HIDRÓGENO VERDE A PARTIR DE UN MIX ENERGÉTICO RENOVABLE PARA DESCARBONIZACIÓN DE FLOTA DE AUTOBUSES URBANOS EN VALLADOLID	FECHA: OCTUBRE 2025 ESCALA: 1/15000	Universidad Europea	PATRICIA LÓPEZ VILLALBA DANIEL CARBONELL GALLARDO IVÁN GARCÍA RIESGO MARTA GARCÍA CUARTERO DIEGO CASTILLO RODRÍGUEZ	Nº PLANO: 3	TÍTULO PLANO: PLANTA DE HIDRÓGENO Y PLANTA FOTOVOLTAICA

Anejo Nº 3

Estudio del Parque Eólico

ESTUDIO Y VIABILIDAD DE PRODUCCIÓN DE HIDRÓGENO VERDE A PARTIR DE UN MIX ENERGÉTICO RENOVABLE PARA DESCARBONIZACIÓN DE FLOTA DE AUTOBUSES URBANOS EN VALLADOLID

1. Curva de potencia tabulada Vestas V90 – 2.0 MW

Vviento (m/s)	Potencia (MW)
0	0
0,5	0
1	0
1,5	0
2	0
2,5	0
3	0,01
3,5	0,02
4	0,046
4,5	0,11
5	0,17
5,5	0,24
6	0,355
6,5	0,46
7	0,58
7,5	0,732
8	0,884
8,5	1,065
9	1,245
9,5	1,428
10	1,612
10,5	1,756
11	1,9
11,5	1,94
12	1,968
12,5	1,98
13	1,99
13,5	2
14	2
14,5	2
15	2
15,5	2
16	2
16,5	2
17	2
17,5	2
18	2
18,5	2
19	2
19,5	2
20	2

20,5	2
21	2
21,5	2
22	2
22,5	2
23	2
23,5	2
24	2
24,5	2
25	2

2. Curva de potencia tabulada Siemens Gamesa G114 – 2.0 MW

Vviento (m/s)	Potencia (MW)
0	0
0,5	0
1	0
1,5	0
2	0
2,5	0,006
3	0,043
3,5	0,076
4	0,135
4,5	0,22
5	0,306
5,5	0,435
6	0,584
6,5	0,724
7	0,917
7,5	1,11
8	1,382
8,5	1,586
9	1,726
9,5	1,817
10	1,875
10,5	1,913
11	1,934
11,5	1,97
12	1,98
12,5	2
13	2
13,5	2
14	2

14,5	2
15	2
15,5	2
16	2
16,5	2
17	2
17,5	2
18	2
18,5	2
19	2
19,5	2
20	2
20,5	2
21	2
21,5	1,958
22	1,9
22,5	1,82
23	1,707
23,5	1,611
24	1,49
24,5	1,37
25	1,215

3. Curva de probabilidad de Weibull tabulada para la ubicación escogida

Vviento (m/s)	Probabilidad Weibull
0	0,015987115
0,5	0,00888826
1	0,018797618
1,5	0,0275246
2	0,03515142
2,5	0,041638823
3	0,046942938
3,5	0,05104225
4	0,053945725
4,5	0,055693975
5	0,056356775
5,5	0,056029025
6	0,054824875
6,5	0,052872
7	0,050305375
7,5	0,0472616
8	0,043873635
8,5	0,040266523

9	0,036553918
9,5	0,032835663
10	0,029196265
10,5	0,025704313
11	0,022412635
11,5	0,019359118
12	0,016567998
12,5	0,014051513
13	0,011811725
13,5	0,009842435
14	0,00813105
14,5	0,006660338
15	0,00541001
15,5	0,00435807
16	0,003481961
16,5	0,002759454
17	0,002169329
17,5	0,00169185
18	0,001309065
18,5	0,001004964
19	0,000765517
19,5	0,000540948

Anejo Nº 4

Estudio del Parque Fotovoltaico

ESTUDIO Y VIABILIDAD DE PRODUCCIÓN DE HIDRÓGENO VERDE A PARTIR DE UN MIX ENERGÉTICO RENOVABLE PARA DESCARBONIZACIÓN DE FLOTA DE AUTOBUSES URBANOS EN VALLADOLID

PVsyst salón de clases

PVsyst - Informe de simulación

Sistema conectado a la red

Proyecto: Valladolid_TFM

Variante: Versión 1

Rastreadores ilimitados

Potencia del sistema: 3453 kWp

Valladolid - España

PVsyst salón de clases

PVsyst salón de clases

PVsyst salón de clases

Author
Universidad Europea (Spain)

PVsyst salón de clases

PVsyst V8.0.16
VC0, Fecha de simulación:
19/10/25 11:16
con V8.0.16

Resumen del proyecto

Sitio geográfico
Valladolid
España

Situación

Latitud	41.62 °(N)
Longitud	-4.64 °(W)
Altitud	844 m
Zona horaria	UTC+1

Configuración del proyecto
Albedo 0.20

Datos meteo
Valladolid
PVGIS api TMY

Resumen del sistema

Sistema conectado a la red

Rastreadores ilimitados

Orientación #1
Rastreo eje horizontal

Azimut del eje	0 °
Phi mín/máx.	-/+ 60 °

Algoritmo de rastreo
Optimización de irradiancia

Sombreados cercanos
sin sombreados

Necesidades del usuario
Carga ilimitada (red)

Información del sistema

Generador FV

Núm. de módulos	5481 unidades
Pnom total	3453 kWp

Inversores

Núm. de unidades	9 unidades
Potencia total	2700 kWca
Proporción Pnom	1.28

Resumen de resultados

Energía producida	6331.6 MWh/año	Producción específica	1834 kWh/kWp/año	Proporción rend. PR	78.74 %
				Prop. rend. bifacial	75.87 %

Tabla de contenido

Resumen de proyectos y resultados 2
Parámetros generales, Características del generador FV, Pérdidas del sistema 3
Resultados principales 5
Diagrama de pérdida 6
Gráficos predefinidos 7
Diagrama unifilar 9

PVsyst salón de clases

PVsyst V8.0.16
VC0, Fecha de simulación:
19/10/25 11:16
con V8.0.16

Parámetros generales

Sistema conectado a la red

Rastreadores ilimitados

Orientación #1

Rastreo eje horizontal

Azimut del eje	0 °
Phi mín/máx.	-/+ 60 °

Algoritmo de rastreo
Optimización de irradiancia

Configuración de rastreadores

Núm. de rastreadores	10 unidades

Rastreadores ilimitados

Ángulos límite de sombreado

Límites de phi	+/- 52.6 °

Tamaños

Espaciado de rastreador	5.00 m
Ancho de sensor	3.00 m
PCS Sombreado	60.4 %
Banda inactiva izquierda	0.02 m
Banda inactiva derecha	0.02 m

Modelos usados

Transposición	Perez
Difuso	Importado
Circunsolar	separado

Horizonte
Horizonte libre

Sombreados cercanos
sin sombreados

Definición del sistema bifacial

Orientación #1

Sistema bifacial
Modelo Modelo 2D de rastreadores ilimitados

Geometría del modelo bifacial

Espaciado de rastreador	5.00 m
Ancho de rastreador	3.04 m
Altura del eje sobre el suelo	1.50 m
Núm. de cobertizos	10 unidades

Definiciones del modelo bifacial

Albedo de tierra	0.30
Factor de bifacialidad	70 %
Fact. sombreado trasero	5.0 %
Fact. desajuste trasero	10.0 %
Fracción transparente de cobertizo	0.0 %

Necesidades del usuario
Carga ilimitada (red)

Características del generador FV

Módulo PV

Fabricante	Generic
Modelo	ASB-M12-132-630-Bifacial
(Base de datos PVsyst original)	
Unidad Nom. Potencia	630 Wp
Número de módulos FV	5481 unidades
Nominal (STC)	3453 kWp
Módulos	189 cadena x 29 En serie

En cond. de funcionam. (50°C)

Pmpp	3159 kWp
U mpp	945 V
I mpp	3344 A

Inversor

Fabricante	Generic
Modelo	SUN2000-300KTL-H0
(Base de datos PVsyst original)	
Unidad Nom. Potencia	300 kWca
Número de inversores	9 unidades
Potencia total	2700 kWca
Voltaje de funcionamiento	550-1500 V
Potencia máx. (=>30°C)	330 kWca
Proporción Pnom (CC:CA)	1.28

Reparto de potencia en este inversor

Potencia FV total

Nominal (STC)	3453 kWp
Total	5481 módulos
Área del módulo	17069 m²
Área celular	15953 m²

Potencia total del inversor

Potencia total	2700 kWca
Potencia máx.	2970 kWca
Número de inversores	9 unidades
Proporción Pnom	1.28

PVsyst V8.0.16
VC0, Fecha de simulación:
19/10/25 11:16
con V8.0.16

Pérdidas del conjunto

Factor de pérdida térmica
Temperatura módulo según irradiancia
Uc (const) 20.0 W/m²K
Uv (viento) 0.0 W/m²K/m/s

Pérdidas de cableado CC
Res. conjunto global 4.6 mΩ
Frac. de pérdida 1.50 % en STC

Pérdida de calidad módulo
Frac. de pérdida -0.38 %

Pérdidas de desajuste de módulo
Frac. de pérdida 2.00 % en MPP

Pérdidas de desajuste de cadenas
Frac. de pérdida 0.10 %

Factor de pérdida IAM
Efecto de incidencia (IAM): Fresnel, revestimiento AR, n(vidrio)=1.526, n(AR)=1.290

0°	30°	50°	60°	70°	75°	80°	85°	90°
1.000	0.999	0.987	0.963	0.892	0.814	0.679	0.438	0.000

PVsyst salón de clases

PVsyst V8.0.16
VC0, Fecha de simulación:
19/10/25 11:16
con V8.0.16

Resultados principales

Producción del sistema

Energía producida	6331.6 MWh/año	Producción específica	1834 kWh/kWp/año
		Proporción rend. PR	78.74 %
		Prop. rend. bifacial	75.87 %

Producciones normalizadas (por kWp instalado)

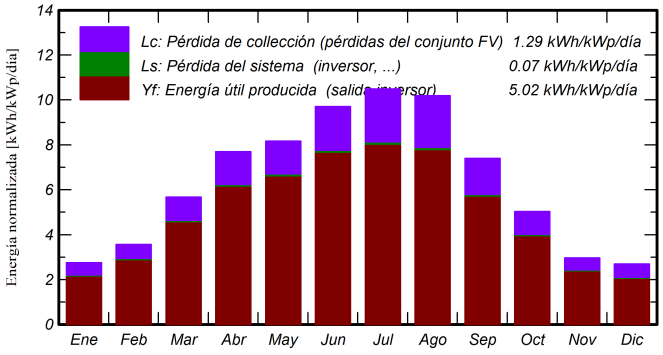

Proporción de rendimiento (PR)

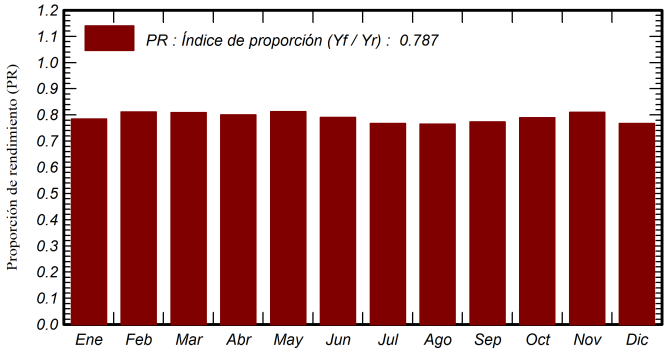

Balances y resultados principales

	GlobHor kWh/m²	DiffHor kWh/m²	T_Amb °C	GlobInc kWh/m²	GlobEff kWh/m²	EArray MWh	E_Grid MWh	PR proporción	PRBifi proporción
Enero	56.5	25.44	4.53	85.5	67.4	236.6	231.7	0.785	0.756
Febrero	69.9	34.04	5.45	100.0	81.8	285.1	280.0	0.811	0.779
Marzo	121.5	58.54	5.89	175.9	145.3	498.1	491.2	0.809	0.778
Abril	165.6	64.52	12.68	231.1	199.0	647.4	639.2	0.801	0.771
Mayo	188.2	83.47	13.39	253.2	222.8	719.2	710.1	0.812	0.781
Junio	213.2	79.55	18.70	291.3	256.6	805.4	795.3	0.791	0.762
Julio	235.4	65.97	25.01	325.1	288.0	871.4	861.0	0.767	0.740
Agosto	218.5	56.58	20.38	316.2	272.7	845.1	835.3	0.765	0.740
Septiembre	153.5	52.87	19.45	222.0	188.1	600.7	593.2	0.774	0.747
Octubre	108.0	45.35	13.20	155.8	128.4	430.7	424.5	0.789	0.759
Noviembre	63.9	34.11	9.39	88.9	72.9	253.4	248.7	0.810	0.776
Diciembre	53.5	24.08	3.98	83.5	63.9	225.9	221.2	0.767	0.740
Año	1647.7	624.53	12.70	2328.6	1987.1	6418.9	6331.6	0.787	0.759

Leyendas

GlobHor	Irradiación horizontal global
DiffHor	Irradiación difusa horizontal
T_Amb	Temperatura ambiente
GlobInc	Global incidente plano receptor
GlobEff	Global efectivo, corr. para IAM y sombreados
EArray	Energía efectiva a la salida del conjunto
E_Grid	Energía inyectada en la red
PR	Proporción de rendimiento
PRBifi	Coeficiente de rendimiento bifacial

PVsyst salón de clases

PVsyst V8.0.16
VC0, Fecha de simulación:
19/10/25 11:16
con V8.0.16

Diagrama de pérdida

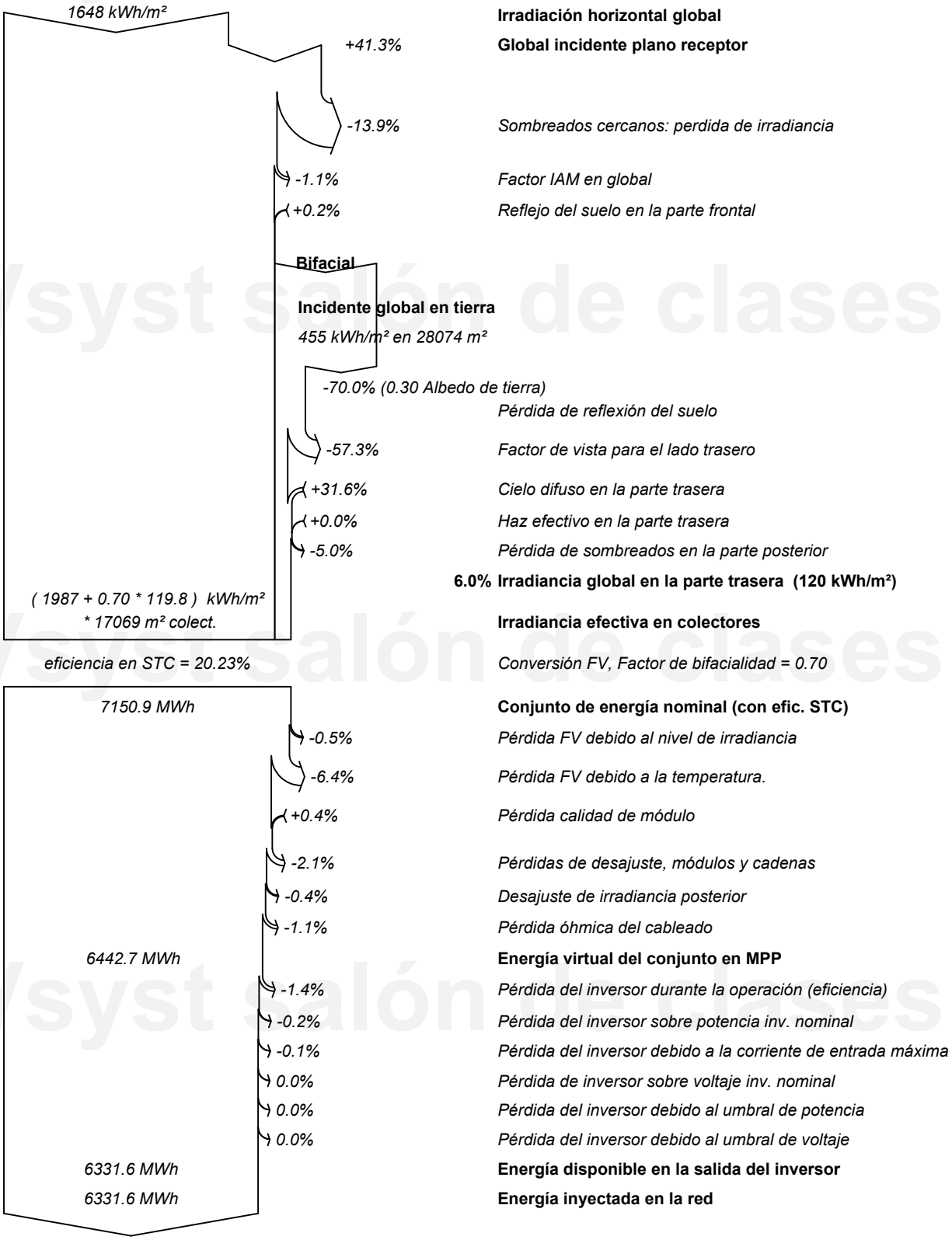

PVsyst V8.0.16
VC0, Fecha de simulación:
19/10/25 11:16
con V8.0.16

PVsyst salón de clases

Gráficos predefinidos

Diagrama entrada/salida diaria

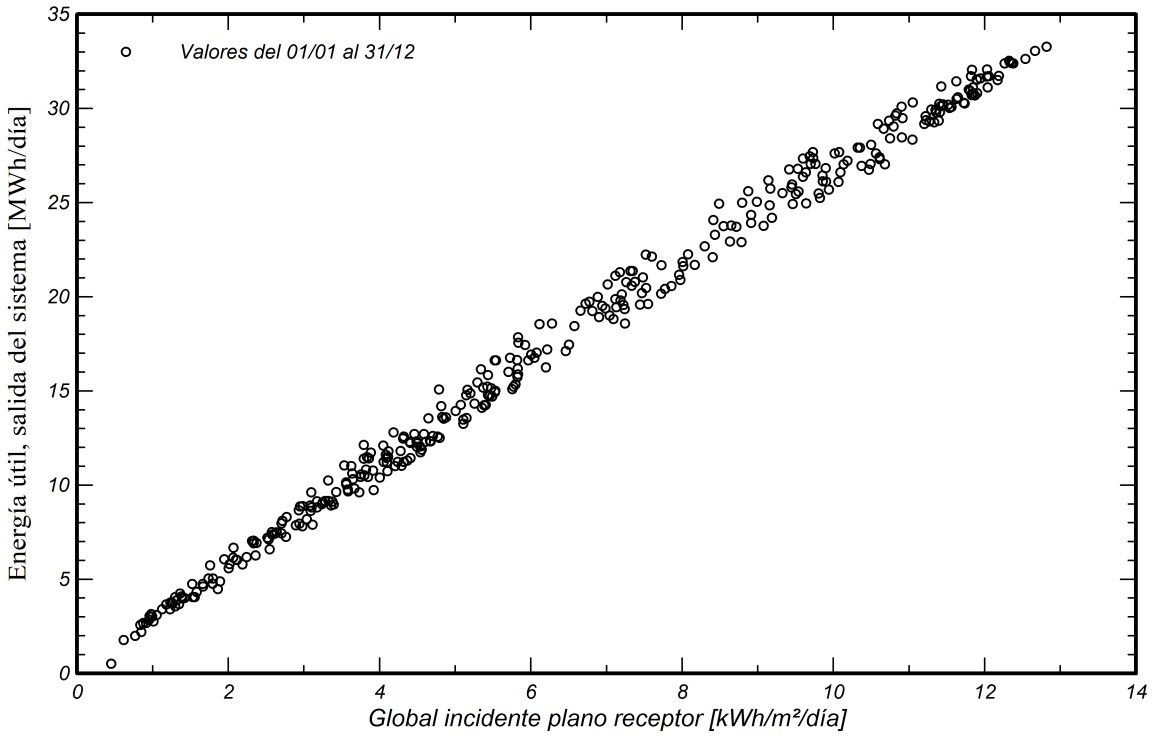

Energía diaria a la salida del sistema

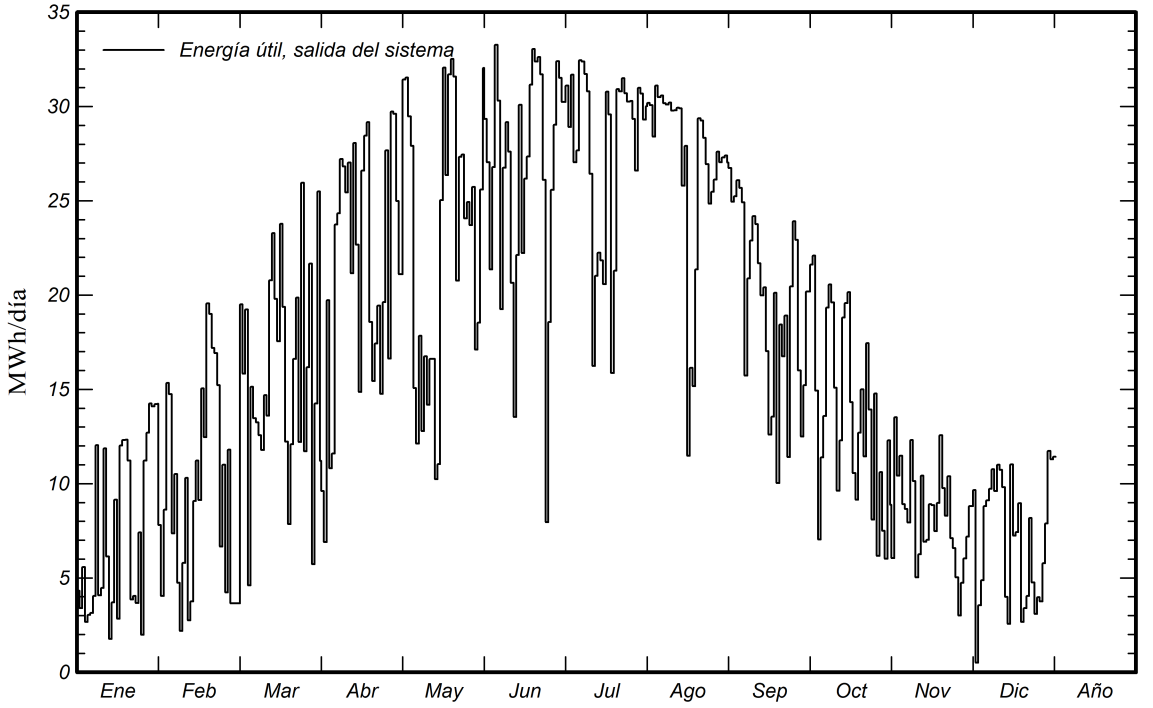

PVsyst salón de clases

PVsyst V8.0.16
VC0, Fecha de simulación:
19/10/25 11:16
con V8.0.16

PVsyst salón de clases

Gráficos predefinidos

Distribución de potencia de salida del sistema

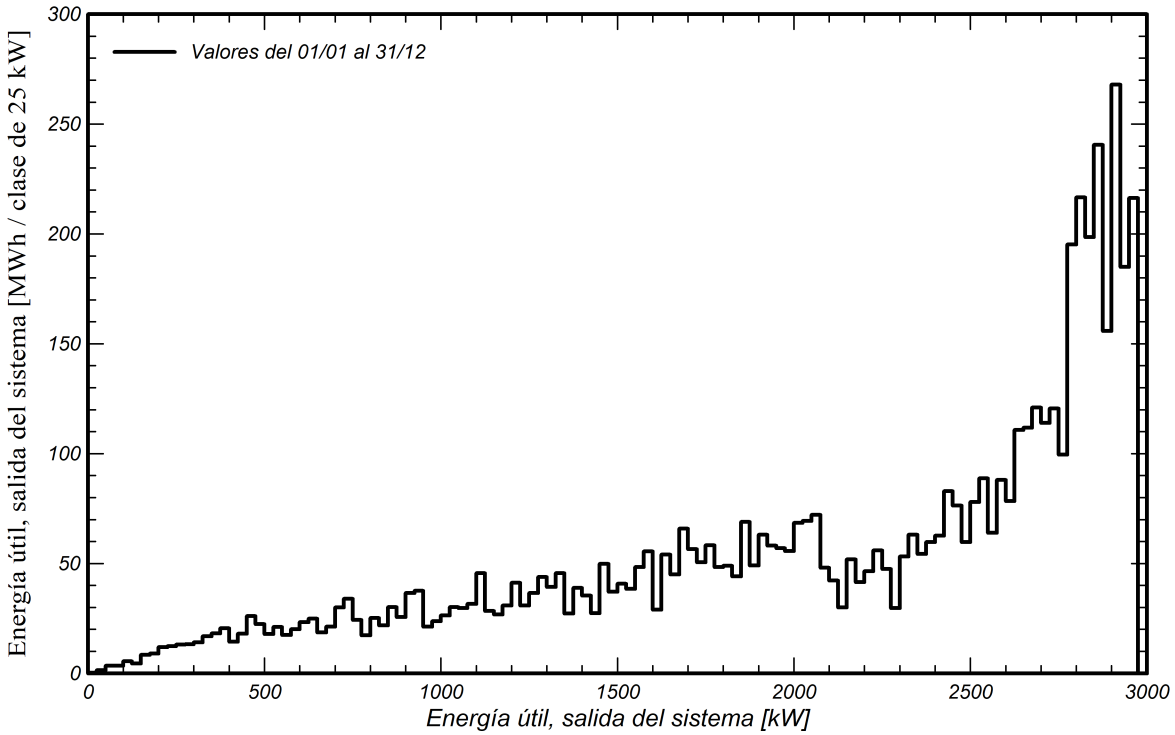

PVsyst salón de clases
PVsyst salón de clases
PVsyst salón de clases

Diagrama unifilar

PVsyst V8.0.16
VC0, Fecha de simulación:
19/10/25 11:16
con V8.0.16

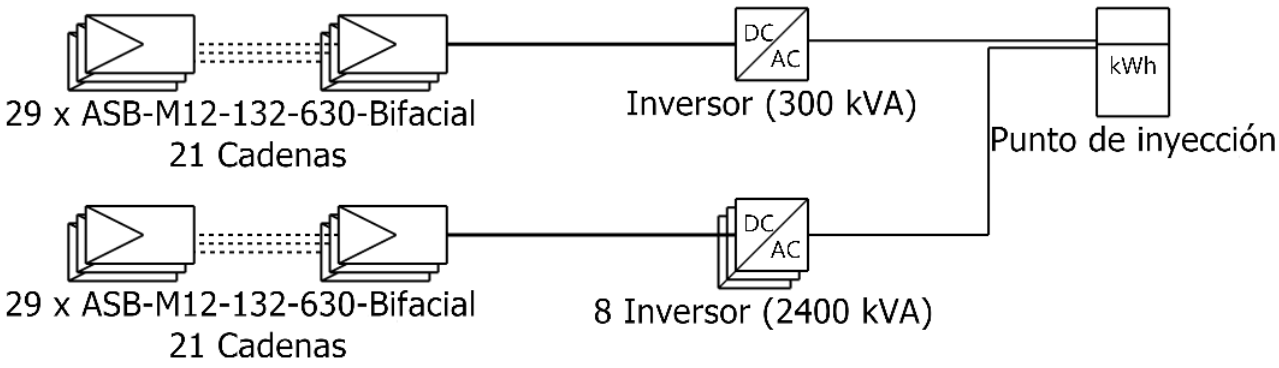

Módulo PV	ASB-M12-132-630-Bifacial
Inversor	SUN2000-300KTL-H0
Cadena	29 x ASB-M12-132-630-Bifacial

	Valladolid_TFM	Universidad Europea (Spain)
	VC0 : Versión 1	19/10/25

String monitoring module ST0HS xx25 (Kernel sistemi)

Component for string monitoring for string combiner boxes

Data sheet
111500_en_01

© Phoenix Contact 2025-09-29

1 Description

The **ST0HS xx25** string monitoring module from Kernel sistemi is installed in string combiner boxes (SCBs). It enables the detection and monitoring of the current and voltage values generated by the connected PV strings.

The string monitoring module is equipped with Hall sensors. As soon as a current flows through the respective Hall sensor, this current is converted internally by the string monitoring module into a measured value. By contrast, voltage measurement is performed via a fixed cable connection connected from the outside.

In addition, the string monitoring module has two digital inputs, an analog input for a Pt100 temperature sensor, and an integrated temperature sensor. The states of the surge arrester and the DC switch disconnector can be monitored using the digital inputs.

Communication with the string monitoring module is possible via a serial RS485 connection. All measured values (temperature, currents, voltage) can be transmitted/read as register entries via the Modbus/RTU protocol. Furthermore, it is possible to monitor the status of the PV fuses in the SCB by reading certain registers of the Modbus memory map.

To read the data of the string monitoring module, you can optionally use the “Solarworx” library and the “KERNEL sistemi” function block. The function block is part of the current Solarworx library version. The Solarworx library is available for download in the PLCnext Store and can be purchased in the form of a license. All information (e.g., on installing/uninstalling licenses or registering for a Proficloud/PLCnext Store account) can be found in the PLCnext Store Info Center (https://store.plcnext.help/st/Home.htm).

2 Table of contents

1 Description 1
2 Table of contents 1
3 Compatible SCBs 2
4 Technical data 2
5 Structure 3
6 Status LED 3
7 Function of DIP switches 4
8 Modbus memory map 5
8.1 Modbus register overview 5
8.2 Description of the memory map 10
8.3 Reading speed 11
8.4 Status of the PV fuses 12
8.5 Changing parameters 12

Observe these notes

Make sure you always use the latest documentation. It can be downloaded at www.phoenixcontact.com/products.

This document is valid for the products listed in Section “Compatible SCBs” on page 2.

3 Compatible SCBs

The **ST0HS xx25** string monitoring module is available for different PV string quantities. It is used in string combiner boxes of the type “SOL-SC-xxST-x-1-XF-1xxxx”.

4 Technical data

General data	
Dimensions (W x H)	ST0HS 1225: 253.8 mm x 128 mm ST0HS 1625: 284 mm x 128 mm ST0HS 2025 | ST0HS 2425: 338 mm x 128 mm
Ambient temperature (operation)	-20°C … 80°C
MTBF	>500000 h
Electrical properties	
Supply voltage	24 V DC
Power consumption (CPU)	ST0HS 1625 | ST0HS 20: <3 W ST0HS 2425: <4 W
Measuring system	
Sensor type	Hall sensor
Number of PV strings	ST0HS 1225: 12 ST0HS 1625: 16 ST0HS 2025: 20 ST0HS 2425: 24
Maximum current per PV string	ST0HS xx25: 25 A
Measuring accuracy (current)	1% of the measuring range end value (calibrated)
Minimum measured value (adjustable)	Current: 1 A | Voltage: 100 V
Interfaces and communication	
Interfaces	Serial (RS-485)/digital/analog (Pt 100, integrated temperature sensor)
Protocol	Modbus/RTU (adjustable using the “SW1” DIP switch)
ID address of the bus device	Adjustable using the “SW2” DIP switch
Number of clients that can be connected in the RS-485 network	Max. 32 (according to RS-485 standard) Max. 100 (with repeater)
Bus line length in the RS-485 network	Max. 1200 m

5 Structure

With the exception of the number of Hall sensors, the structure is identical for all versions of the string monitoring module. Figure 1 shows an example of the structure of the string monitoring module with 20 Hall sensors for 20 PV strings.

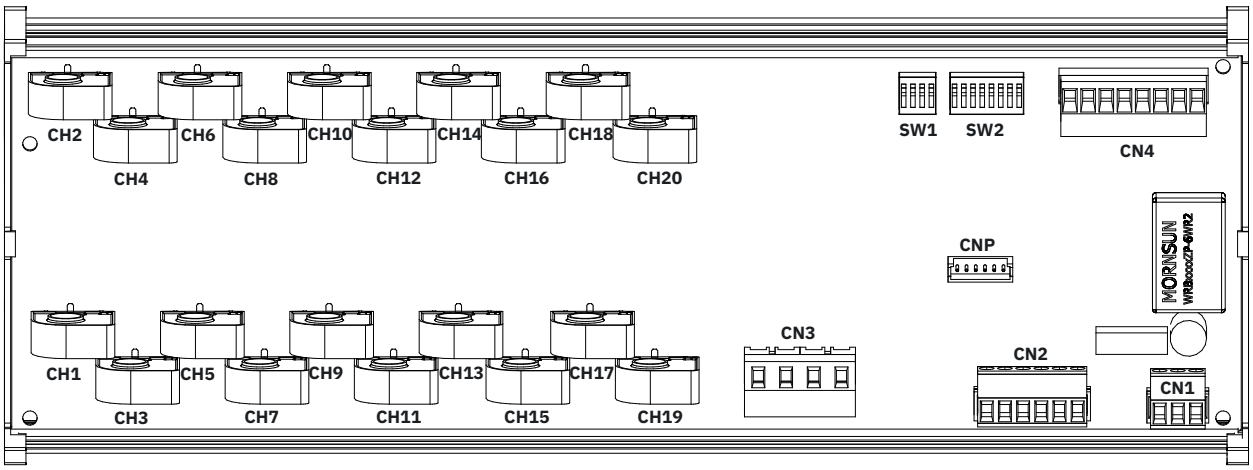

Figure 1 Structure of the string monitoring module (using version **ST0HS 2025** for 20 PV strings as an example)

Component	Description
CH1 ... CH20	Hall sensor 1 to 20 for current measurement
CN1	24 V DC supply connection
CN2	Serial interface (RS-485)
CN3	Connection for voltage measurement
CN4	Connection of the digital inputs (pin 5 ... 8) and the integrated Pt100 temperature sensor (pin 1 ...3)
SW1	DIP switch for communication protocol and baud rate
SW2	DIP switch for the ID address of the bus device

6 Status LED

There is a status LED on the printed circuit board of the string monitoring module that flashes to indicate the operating state.

There are two flashing rates:

- LED flashes every 0.5 seconds: String monitoring module ready for communication
- Flashing faster than 0.5 seconds: No communication. String monitoring module in test mode, all DIP switches switched off.

7 Function of DIP switches

Use the two “SW1 and “SW2” DIP switches to make the settings for communication. Figure 2 and the corresponding table describe the meaning of the switch positions.

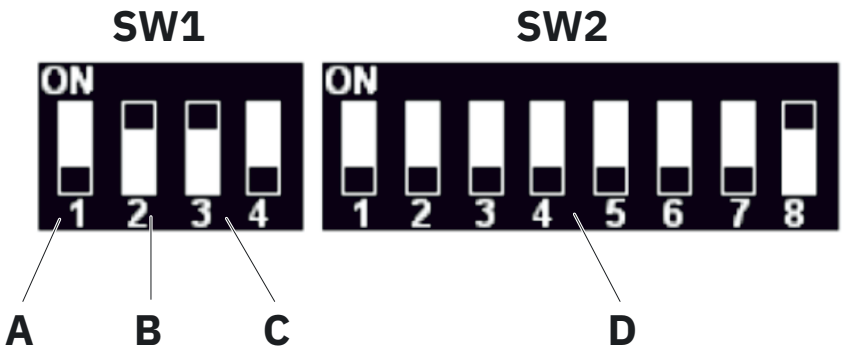

Figure 2 Function of the “SW1” and “SW2” DIP switches on the string monitoring module

DIP switch		Description
Designation	**No.**	
SW1		**DIP switch for communication protocol and baud rate**
	1	No function
	2	Type of protocol: 0 = IEC 60870-5-101 1 = Modbus/RTU
	3 / 4	Baud rate: 00 = 2400 01 = 4800 10 = 9600 11 = 19200 Please note that fast baud rates are generally more susceptible to interference.
SW2	1 ... 8	**DIP switch for the ID address of the bus device:** – 00000001 = 1 – 00000010 = 2 – 00000011 = 3 – 00000111 = 4 [...] To ensure trouble-free communication when several SCBs are used with a string monitoring module, each module must be given a unique ID address.

Parity: NO_PARITY / bit: 8 / stop bit: 1

Default setting of the DIP switches in the Phoenix Contact SCBs

The monitoring data of the PV strings and the SCB is transmitted in binary form via the serial RS-485 interface of the string monitoring module.

- Protocol: Modbus/RTU
- Read and write access: ✓
- Baud rate: 9600
- Address: 1

8 Modbus memory map

8.1 Modbus register overview

Meaning of the abbreviations
RO = Read Only / RW (Read and Write)

Note on the “Offset” and “Gain” registers
Each “Offset” register has “0” as the default value. Each “Gain” register has “1000” as the default value. The value 1000 means “x1”. For example, to change the value “x1” to “x0.5”, “1000” must be changed to “500”.

Modbus register	Type	Value	
30001	RO	Inputs	
30002	RO	Inst Curr Str_01	*(mA [-25000...25000])*
30003	RO	Inst Curr Str_02	*(mA [-25000...25000])*
30004	RO	Inst Curr Str_03	*(mA [-25000...25000])*
30005	RO	Inst Curr Str_04	*(mA [-25000...25000])*
30006	RO	Inst Curr Str_05	*(mA [-25000...25000])*
30007	RO	Inst Curr Str_06	*(mA [-25000...25000])*
30008	RO	Inst Curr Str_07	*(mA [-25000...25000])*
30009	RO	Inst Curr Str_08	*(mA [-25000...25000])*
30010	RO	Inst Curr Str_09	*(mA [-25000...25000])*
30011	RO	Inst Curr Str_10	*(mA [-25000...25000])*
30012	RO	Inst Curr Str_11	*(mA [-25000...25000])*
30013	RO	Inst Curr Str_12	*(mA [-25000...25000])*
30014	RO	Inst Curr Str_13	*(mA [-25000...25000])*
30015	RO	Inst Curr Str_14	*(mA [-25000...25000])*
30016	RO	Inst Curr Str_15	*(mA [-25000...25000])*
30017	RO	Inst Curr Str_16	*(mA [-25000...25000])*
30018	RO	Inst Curr Str_17	*(mA [-25000...25000])*
30019	RO	Inst Curr Str_18	*(mA [-25000...25000])*
30020	RO	Inst Curr Str_19	*(mA [-25000...25000])*
30021	RO	Inst Curr Str_20	*(mA [-25000...25000])*
30022	RO	Inst Curr Str_21	*(mA [-25000...25000])*
30023	RO	Inst Curr Str_22	*(mA [-25000...25000])*
30024	RO	Inst Curr Str_23	*(mA [-25000...25000])*
30025	RO	Inst Curr Str_24	*(mA [-25000...25000])*
[...]			
30034	RO	Status of PV fuse (Ch01 ... Ch16)	
30035	RO	Status of PV fuse (Ch17 ... Ch24)	
[...]			
30040	RO	Inst V_1	*(V [0...1500])*
[...]			
30044	RO	Inst T_1	*(°C [-20...+120]) - PT100*
30045	RO	Inst T_2	*(°C [-22.0...+83.0]) – on board*
[...]			
30047	RO	Total current *(A / 10)*	
30048	RO	Power *(W)* - LSW	
30049	RO	Power *(W)* - MSW	

Modbus register	Type	Value	
[...]			
30052	RO	AVG Curr Str_01 (mean value of the last 6 seconds)	
30053	RO	AVG Curr Str_02 (mean value of the last 6 seconds)	
30054	RO	AVG Curr Str_03 (mean value of the last 6 seconds)	
30055	RO	AVG Curr Str_04 (mean value of the last 6 seconds)	
30056	RO	AVG Curr Str_05 (mean value of the last 6 seconds)	
30057	RO	AVG Curr Str_06 (mean value of the last 6 seconds)	
30058	RO	AVG Curr Str_07 (mean value of the last 6 seconds)	
30059	RO	AVG Curr Str_08 (mean value of the last 6 seconds)	
30060	RO	AVG Curr Str_09 (mean value of the last 6 seconds)	
30061	RO	AVG Curr Str_10 (mean value of the last 6 seconds)	
30062	RO	AVG Curr Str_11 (mean value of the last 6 seconds)	
30063	RO	AVG Curr Str_12 (mean value of the last 6 seconds)	
30064	RO	AVG Curr Str_13 (mean value of the last 6 seconds)	
30065	RO	AVG Curr Str_14 (mean value of the last 6 seconds)	
30066	RO	AVG Curr Str_15 (mean value of the last 6 seconds)	
30067	RO	AVG Curr Str_16 (mean value of the last 6 seconds)	
30068	RO	AVG Curr Str_17 (mean value of the last 6 seconds)	
30069	RO	AVG Curr Str_18 (mean value of the last 6 seconds)	
30070	RO	AVG Curr Str_19 (mean value of the last 6 seconds)	
30071	RO	AVG Curr Str_20 (mean value of the last 6 seconds)	
30072	RO	AVG Curr Str_21 (mean value of the last 6 seconds)	
30073	RO	AVG Curr Str_22 (mean value of the last 6 seconds)	
30074	RO	AVG Curr Str_23 (mean value of the last 6 seconds)	
30075	RO	AVG Curr Str_24 (mean value of the last 6 seconds)	
[...]			
30084	RO	AVG V_1 *(V [0...1500])* (mean value of the last 6 seconds)	
[...]			
30088	RO	AVG T_1 (*°C [-20...+120]) - PT100* *(*mean value of the last 6 seconds*)*	
30089	RO	AVG T_2 *(°C [-22.0...+83.0]) – on board* (mean value of the last 6 seconds)	
[...]			
30091	RO	Sum of all currents *(A / 10)* (mean value of the last 6 seconds)	
30092	RO	AVG power *(W)* - LSW (mean value of the last 6 seconds)	
30093	RO	AVG power *(W)* - MSW (mean value of the last 6 seconds)	
[...]			
300201	RO	Firmware version	Read only
300202	RO	ST0HS model	Read only
300203	RO	Channel number	Read only
300204	RO	Shunt type	Read only
300205	RO	Final scaling value	Read only

Modbus register	Type	Value	
300206	RO	Reserved for future use	RFU
300207	RO	Reserved for future use	RFU
300208	RO	Reserved for future use	RFU
300209	RO	Reserved for future use	RFU
300210	RO	Reserved for future use	RFU
300211	RO	Unique device ID [0] (=30211)	Read only
300212	RO	Unique device ID [1] (=30212)	Read only
300213	RO	Unique device ID [2] (=30213)	Read only
300214	RO	Unique device ID [3] (=30214)	Read only
300215	RO	Unique device ID [4] (=30215)	Read only
300216	RO	Unique device ID [5] (=30216)	Read only

[...]

40001	RW	Set parity: 1 = none; 2 = even; 3 = odd
40002	RW	Offset Curr Str_01
40003	RW	Offset Curr Str_02
40004	RW	Offset Curr Str_03
40005	RW	Offset Curr Str_04
40006	RW	Offset Curr Str_05
40007	RW	Offset Curr Str_06
40008	RW	Offset Curr Str_07
40009	RW	Offset Curr Str_08
40010	RW	Offset Curr Str_09
40011	RW	Offset Curr Str_010
40012	RW	Offset Curr Str_011
40013	RW	Offset Curr Str_012
40014	RW	Offset Curr Str_013
40015	RW	Offset Curr Str_014
40016	RW	Offset Curr Str_015
40017	RW	Offset Curr Str_016
40018	RW	Offset Curr Str_017
40019	RW	Offset Curr Str_018
40020	RW	Offset Curr Str_019
40021	RW	Offset Curr Str_020
40022	RW	Offset Curr Str_021
40023	RW	Offset Curr Str_022
40024	RW	Offset Curr Str_023
40025	RW	Offset Curr Str_024

[...]

40034	RW	Response delay (msec)
40035	RW	Time Com Active (1/10 sec.)

Modbus register	Type	Value
40036	RW	Parity (1 = none, 2 = even, 3 = odd) = 40001
40037	RW	PV fuse threshold value
40038	RW	Reverse sign of current measurement (Ch01...Ch16)
40039	RW	Reverse sign of current measurement (Ch01...Ch24)
40040	RW	Offset V_1
[...]		
40044	RW	Offset T_1
40045	RW	Offset T_2
[...]		
40047	RW	Minimum current (default = 1 A)
40048	RW	Minimum voltage (default = 100 V)
[...]		
40052	RW	Gain Curr Str_1
40053	RW	Gain Curr Str_2
40054	RW	Gain Curr Str_3
40055	RW	Gain Curr Str_4
40056	RW	Gain Curr Str_5
40057	RW	Gain Curr Str_6
40058	RW	Gain Curr Str_7
40059	RW	Gain Curr Str_8
40060	RW	Gain Curr Str_9
40061	RW	Gain Curr Str_10
40062	RW	Gain Curr Str_11
40063	RW	Gain Curr Str_12
40064	RW	Gain Curr Str_13
40065	RW	Gain Curr Str_14
40066	RW	Gain Curr Str_15
40067	RW	Gain Curr Str_16
40068	RW	Gain Curr Str_17
40069	RW	Gain Curr Str_18
40070	RW	Gain Curr Str_19
40071	RW	Gain Curr Str_20
40072	RW	Gain Curr Str_21
40073	RW	Gain Curr Str_22
40074	RW	Gain Curr Str_23
40075	RW	Gain Curr Str_24
[...]		
40090	RW	Gain V_1
[...]		
40094	RW	Gain T_1
40095	RW	Gain T_2
[...]		
400101	RW	Free memory 01
400102	RW	Free memory 02
400103	RW	Free memory 03
400104	RW	Free memory 04

Modbus register	Type	Value	
400105	RW	Free memory 05	
400106	RW	Free memory 06	
400107	RW	Free memory 07	
400108	RW	Free memory 08	
[...]			
400201	RO	Shunt type (= 30204)	Read only
400202	RO	ST0HS model (= 30202)	Read only
400203	RO	Firmware version (= 30201)	Read only
400204	RO	Channel number (= 30203)	Read only
400205	RO	Final scaling value	Read only
400206	RO	Reserved for future use	RFU
400207	RO	Reserved for future use	RFU
400208	RO	Reserved for future use	RFU
400209	RO	Reserved for future use	RFU
400210	RO	Unique device ID [0] (=30211)	Read only
400211	RO	Unique device ID [1] (=30212)	Read only
400212	RO	Unique device ID [2] (=30213)	Read only
400213	RO	Unique device ID [3] (=30214)	Read only
400214	RO	Unique device ID [4] (=30215)	Read only
400215	RO	Unique device ID [5] (=30216)	Read only

8.2 Description of the memory map

The memory map of the string monitoring module consists of 16-bit memory cells (1 word) that are referred to as “registers”. Since each register consists of 16 bits, its maximum value is 65535.

30001: The first two bits of this register reflect the status of the two digital inputs on the printed circuit board of the string monitoring module (INP0, INP1 on CN4).

30001 = 0000000000000011 [bin] = 3 [dec], means that both digital inputs are switched on.

30002 ... 30025: These registers contain the current measured values of channels 01 to 24 in mA.

30034, 30035: The sixteen bits of 30034 and the first eight bits of 30035 indicate whether or not the current value of each channel is below 200 mA. This threshold value represents the status of the PV fuses.

30040 ... 30049: These registers also show the measured values for temperature (T1 and T2) and voltage (at connector CN3).

30052 ... 30075: Floating mean values. These registers contain the mean value of the last 6 seconds of the current measurement. These values are smoothed compared to the instantaneous values shown in registers 30002 to 30025.

40001: Register for parity. The default value is zero, i.e., “no parity”

40002 ... 40025: “Offset” register. These registers with the default value “0” enable the addition of a calibration value to the current measurement. This means that any read errors can be compensated for.

Example:

Channel 1 (“Channel 1”, in short “CH1”) outputs a current measured value of 2.3 A. Therefore, register 30002 contains the value 2300.

If you now enter the value 200 in register 40002, the value in register 30002 changes to 2500, i.e., channel 1 (CH1) now outputs a current measured value of 2.5 A.

Changes to the “Offset” registers are not usually required.

40052 ... 40075: “Gain” register. These registers with the default value of 1000 make it possible to multiply a fixed value with the respective current measured value of the individual channels. This means that any read errors can be compensated for.

Example:

Channel 1 (“Channel 1”, in short “CH1”) outputs a current measured value of 2.3 A. Therefore, register 30002 contains the value 2300.

If you now enter the value 1500 in register 40052, the value in register 30002 changes to 3450, as 2300 x 1.5 = 3450.

Any change to the “Gain” registers is not usually required.

40101 ... 40108: Eight registers that are freely available to the user. They can be used for additional data, e.g., for consecutive numbering of the string monitoring modules used in the system.

40201: Shunt type (= 30204) – read only

40202: ST0HS model (= 30202) – read only

40203: Firmware version (= 30201) – read only

40204: Channel number (= 30203) – read only

40205: Final scaling value (= 30205) – read only

40206 ... 40209: Not used – reserved for future use (RFU)

40210 ... 40215: Unique device ID register (96 bits, organized in six 16-bit words) that is unique for each card (= 30211 ... 30216) – read only

The unique device ID is suitable for the following applications:

– As serial number (e.g., string serial numbers or other end applications)
– As part of the security key to increase security in the network

The unique 96-bit device ID provides a reference number that is unique for each device and in every context. This part cannot be changed by the user. The code consists of the following parts:

– **UID [31:00]:** X and Y coordinates on the wafer, given in BCD format
– **UID [39:32]:** WAF_NUM [07:00] >wafer number (8-bit number without sign)
– **UID [63:40]:** LOT_NUM [23:00] >batch number (ASCII-coded)
– **UID [95:64]:** LOT_NUM [55:24] >batch number (ASCII-coded)

8.3 Reading speed

The measured values for current, voltage, and temperature are read simultaneously with a sampling rate of 100 ms. The values are inserted in a separate register according to the FIFO principle (FIFO = First In - First Out), each consisting of 16 values. The value read by the string monitoring module is the floating mean value of the FIFO register, i.e., the mean value of the last 16 values read (1.6 seconds), which is updated every 100 ms.

This method offers a good compromise between the reading speed and the reliability of the values.

The instantaneous values are temporarily saved to a hidden memory area that cannot be accessed via the COM port.

The update time depends on the query time of the SCADA system and the set baud rate.

The total time required to read data via the COM port consists of the following three individual times:

– Query time
– Latency time
– Response time

The **query time** is the time the SCADA system needs to send the Modbus query packet. It depends on the baud rate (approx. 4 ms at a baud rate of 19200).

The **latency time** is the time the string monitoring module needs to process the query and prepare the response. It is between 1 ms and 2 ms and is independent of the baud rate.

The **response time** is the time the string monitoring module needs to send the MODBUS response packet. It depends on the baud rate and the number of simultaneously read registers. For a single register that is read with 19200 baud, it is about 4 ms.

At a baud rate of 19200, the total time required to read a single register is about 10 ms. For each additional register, the total time is increased by 1 ms. Reading, e.g., 16 registers with a single query therefore takes 10 ms + 15 * 1 ms = 25 ms.

8.4 Status of the PV fuses

The fuse status is output as a bit. There are two Modbus registers that indicate the status of the PV fuses: register **30034** and register **30035**.

Each bit of these two registers corresponds to a measuring channel (“Channel”, in short “CH”). There are a maximum of 32 bits, as with the ST0HS xx25 string monitoring module a maximum of 32 measuring channels are possible. If a string monitoring module, e.g., has 16 measuring channels, only the first 16 bits of these 32 bits are used.

The assignment of the measuring channels to the bits is as follows:

- Bit 0 of register 30034 = CH 0
- Bit 1 of register 30034 = CH 1
  [...]
- Bit 15 of register 30034 = CH 15
- Bit 0 of register 30035 = CH 16
  [...]
- Bit 15 of register 30035 = CH 31

The 32 bits of register **30034** and register **30035** indicate whether the current of each measuring channel is above or below 200 mA. The threshold value of 200 mA is used as a reference to determine the status of the PV fuses.

8.5 Changing parameters

The memory map is write-protected. If you want to change the value of a read/write parameter, you must temporarily remove the write protection.

Temporarily removing the write protection

1. Write the “0x5555” (hexadecimal) value to Modbus register 40100.
   ↪ The write protection is removed for 10 minutes.
2. Adjust the desired read/write parameter(s).

adani Solar



ELAN PRIDE Series

MBB P-Type PERC Half-cut Bifacial PV Modules

ASB-M12-132-AAA (AAA=630-650) | 132 Cells | 630-650 Wp

Highlights

- MBB cell technology - excellent anti- microcracking performance with more balanced interior stress: grid pattern current path, lower cost
- Up to 730 Wp at 15% bifaciality Gain**
  Up to 70 ± 5 % bifaciality Factor
- Longer Product life and performance -0.45 year over year degradation with 30 years warranty on power
- Least Degradation for LID , LeTID
- Modules Made with Ga doped wafer,
  Smart soldering , 12BB
- High salt mist and ammonia resistance

Higher generation due to bifacial technology

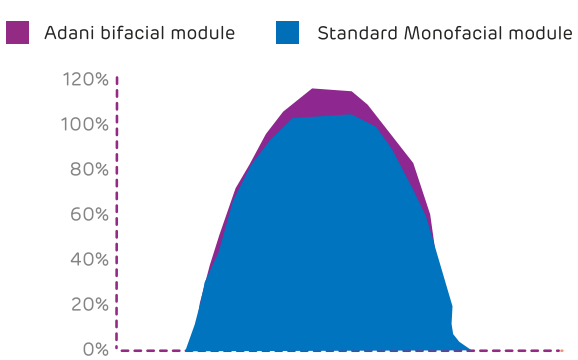

Warranty based on Power

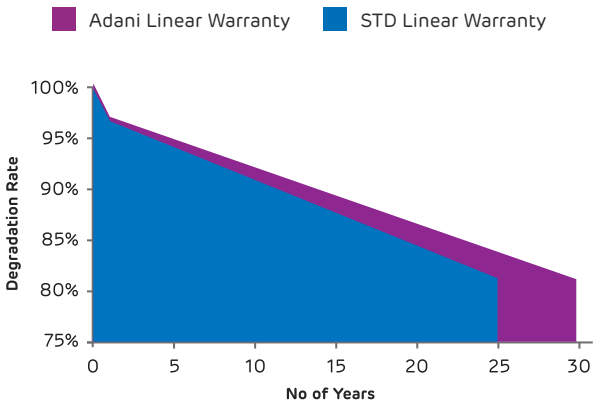

www.adanisolar.com

Technical Data

Multi irradiance curve for ASB-M12-132-AAA

Cell temp: 25°C

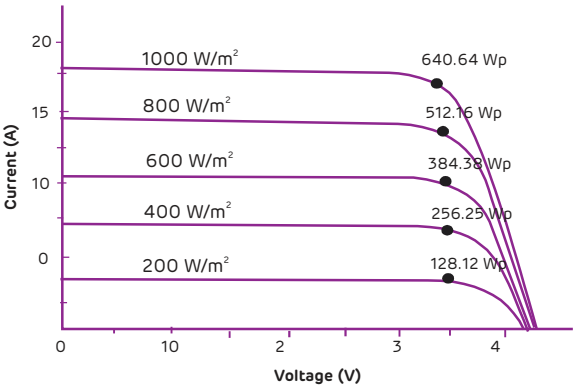

Dimensions in mm

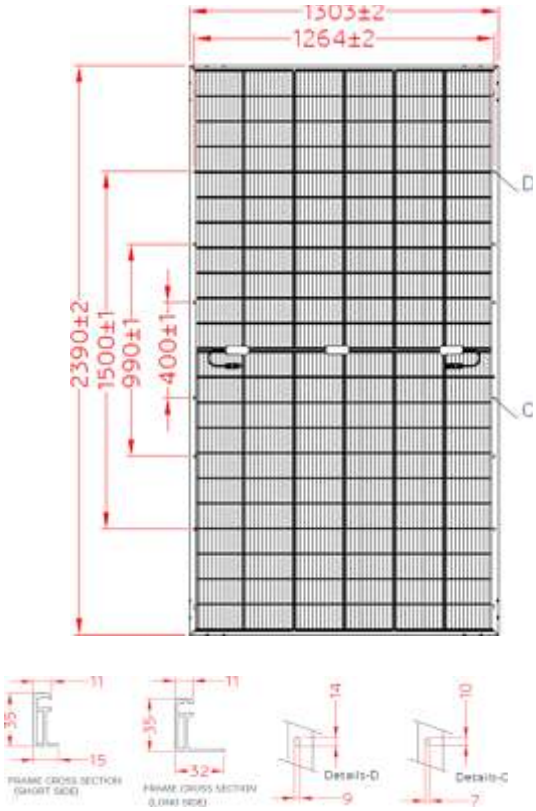

Warranty and certifications

Product warranty**
12 years of product warranty

Performance guarantee**
Power degradation <2.0 % in first year
<0.55 % / year in 2-30 years

Approvals and certificates* : IEC 61215 Ed2, IEC 61730, IEC 61701, UL 1703, MCS, JET, CEC, CEC-Aus, IEC 62716, IEC 62782, IEC 60068-2-68, IEC 61853, BIS

*All certifications are under process

Recyclable packaging

EU-28 WEEE COMPLIANT

Electrical data – All data measured to STC*

Electrical Specification	Only front (STC)				
Peak power, (0 ~+ 4.99 Wp) Pmax(Wp)	630	635	640	645	650
Maximum voltage, Vmpp (V)	36.66	36.82	37.01	37.15	37.32
Maximum current, Impp (A)	17.19	17.25	17.31	17.37	17.44
Open circuit voltage, Voc (V)	42.87	43.08	43.28	43.47	43.66
Short circuit current, Isc (A)	18.57	18.63	18.69	18.75	18.85
Module efficiency (%)	20.23	20.39	20.55	20.71	20.87

*STC: Irradiance 1000 W/m², cell temperature 25°C, ir mass AM1.5 according to EN 60904-3. Average efficiency reduction of 4.5 % at 200 W/m² according to EN 60904-1. Except Pmpp, all other parameters have a tolerance of +/-3 %, measurement uncertainty <3 %

Electrical Characteristics with different rear side power gain (Reference 640 Wp Front)

Electrical Specification	Pmax gain from rear side*			
Bifaciality Gain	5%	10%	15%	20%
Peak power, (0 ~+ 4.99 Wp) Pmax(Wp)	670	700	730	765
Maximum voltage, Vmpp (V)	37.01	37.01	37.01	37.01
Maximum current, Impp (A)	18.00	18.91	19.84	20.06
Open circuit voltage, Voc (V)	42.91	42.91	42.91	42.91
Short circuit current, Isc (A)	19.57	20.47	21.36	22.35
Module efficiency (%)	21.51	22.48	23.44	24.57

* Power gain from rear side depends upon the ground reflectance (Albedo) & Bifaciality factor.

Temperature co-efficients (Tc) and permissible operating conditions

T_c of open circuit voltage (β)	-0.25% /°C
T_c of short circuit current (α)	0.041 % /°C
T_c of power (γ)	-0.34 % /°C
Maximum system voltage	1500 V (IEC & UL)
NOCT	44°C ± 2°C
Temperature range	-40°C to + 85°C

Mechanical data

Length	2390 mm
Width	1303 mm
Height	35 mm
Weight	39.9 kg
Junction box	IP68; Junction box, MC4 compatible
Cable and connectors	300 mm length cable, MC4 & Amphenol compatible connectors
Application class	Class A (Safety class II)
Superstrate	2.0mm High Transmission ARC, Heat Strengthened Glass
Cells	132 half-cut mono-crystalline P-type PERC bifacial solar cells; MBB
Encapsulation	High volume resistivity and low MVTR
Substrate	Semi Tempered Glass -2.0 mm
Frame	Anodized Frame
Mechanical load test as per IEC & UL	5400 Pa-front; 2400 Pa-back*
Maximum series fuse rating	30 A

Packaging Configuration

Container	40'HC
Pieces / Container	558

**Disclaimer : Pieces/Container will change subject to Packing design Modification.

Note:

- The specifications included in this datasheet are subject to change without notice.
- The electrical data given here is for reference purpose only.
- Please confirm your exact requirements with the sales representative while placing your order.

**** Warranty:**
Please read Adani solar warranty documents thoroughly.

***Caution:**
Please read safety and installation instructions before using the product.

Authorized distributor: Loop Solar | P: +91-9971136369 | E: info@loopsolar.com | W: www.loopsolar.com

Copyright © Huawei Technologies Co., Ltd. 2024. All rights reserved.

No part of this document may be reproduced or transmitted in any form or by any means without prior written consent of Huawei Technologies Co., Ltd.

Trademarks and Permissions


and other Huawei trademarks are trademarks of Huawei Technologies Co., Ltd.
All other trademarks and trade names mentioned in this document are the property of their respective holders.

Notice

The purchased products, services and features are stipulated by the contract made between Huawei and the customer. All or part of the products, services and features described in this document may not be within the purchase scope or the usage scope. Unless otherwise specified in the contract, all statements, information, and recommendations in this document are provided "AS IS" without warranties, guarantees or representations of any kind, either express or implied.

The information in this document is subject to change without notice. Every effort has been made in the preparation of this document to ensure accuracy of the contents, but all statements, information, and recommendations in this document do not constitute a warranty of any kind, express or implied.

Huawei Technologies Co., Ltd.

Address: Huawei Industrial Base
Bantian, Longgang
Shenzhen 518129
People's Republic of China

Website: https://e.huawei.com

About This Document

Purpose

This document describes the installation, commissioning, maintenance, and troubleshooting of the SUN2000-250KTL-H1, SUN2000-250KTL-H3, SUN2000-280KTL-H0, SUN2000-300KTL-H0, SUN2000-330KTL-H1, and SUN2000-330KTL-H2 (also referred to as SUN2000). Before installing and operating the SUN2000, ensure that you are familiar with the features, functions, and safety precautions provided in this document.

Figures provided in this document are for reference only.

Intended Audience

This document is intended for photovoltaic (PV) plant operating personnel and qualified electricians.

Symbol Conventions

The symbols that may be found in this document are defined as follows.

Symbol	Description
DANGER	Indicates a hazard with a high level of risk which, if not avoided, will result in death or serious injury.
WARNING	Indicates a hazard with a medium level of risk which, if not avoided, could result in death or serious injury.
CAUTION	Indicates a hazard with a low level of risk which, if not avoided, could result in minor or moderate injury.
NOTICE	Indicates a potentially hazardous situation which, if not avoided, could result in equipment damage, data loss, performance deterioration, or unanticipated results. NOTICE is used to address practices not related to personal injury.

Copyright © Huawei Technologies Co., Ltd.

2 Overview

The SUN2000 is a three-phase grid-tied PV string inverter that converts the DC power generated by PV strings into AC power and feeds the power into the power grid.

2.1 Model Number Description

This document involves the following product models:

- SUN2000-250KTL-H1
- SUN2000-250KTL-H3
- SUN2000-280KTL-H0
- SUN2000-300KTL-H0
- SUN2000-330KTL-H1
- SUN2000-330KTL-H2

Figure 2-1 Model number

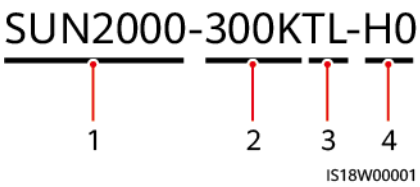

 Copyright © Huawei Technologies Co., Ltd.

No.	Item	Description
1	Product family identifier	SUN2000: grid-tied solar inverter
2	Power level identifier	250K/280K/300K/330K: power level
3	Topology identifier	TL: transformerless
4	Product series identifier	HX: product series with an input voltage level of 1500 V DC • 250KTL-H1: a rated power of 250 kW • 250KTL-H3: a rated power of 250 kW • 280KTL-H0: a rated power of 280 kW • 300KTL-H0: a rated power of 300 kW • 330KTL-H1: a rated power of 300 kW • 330KTL-H2: a rated power of 275 kW

2.2 Networking Application

Typical Networking

The SUN2000 supports RS485 communication and MBUS communication. In the networking diagram, — indicates the power cable, → indicates the power flow direction, and ⩙ and — indicate the signal flow.

NOTICE

The MBUS communication is applicable to medium-voltage grid connection scenarios and non-low-voltage public grid connection scenarios (industrial environment).

Copyright © Huawei Technologies Co., Ltd.

Figure 2-2 MBUS networking application (without a SmartMBUS CCO)

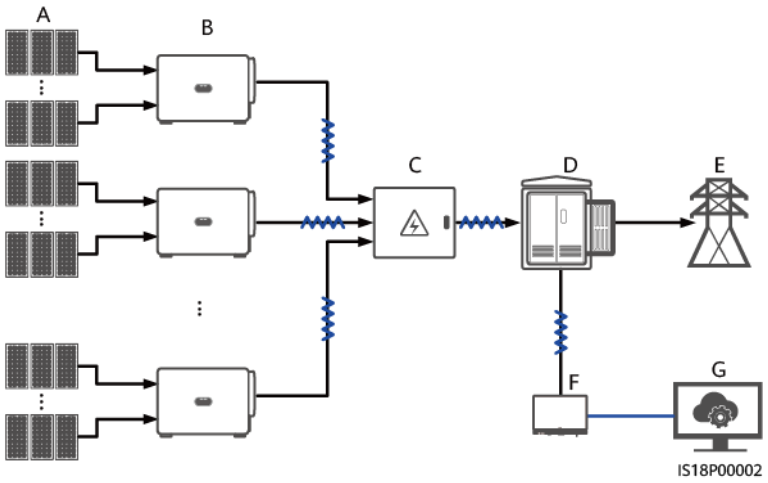

(A) PV strings (B) SUN2000s (C) AC combiner box

(D) Transformer station (E) Power grid (F) SmartLogger

(G) Management system - -

Figure 2-3 MBUS networking application (double-winding transformer +SmartMBUS CCO)

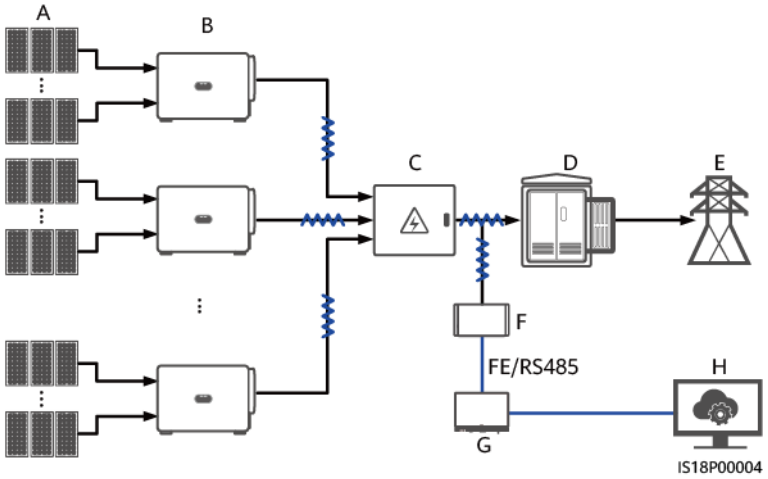

(A) PV strings (B) SUN2000s (C) AC combiner box

(D) Transformer station (E) Power grid (F) SmartMBUS CCO01B

(G) SmartLogger (H) Management system -

 Copyright © Huawei Technologies Co., Ltd.

Figure 2-4 MBUS networking application (double-split transformer+SmartMBUS CCO)

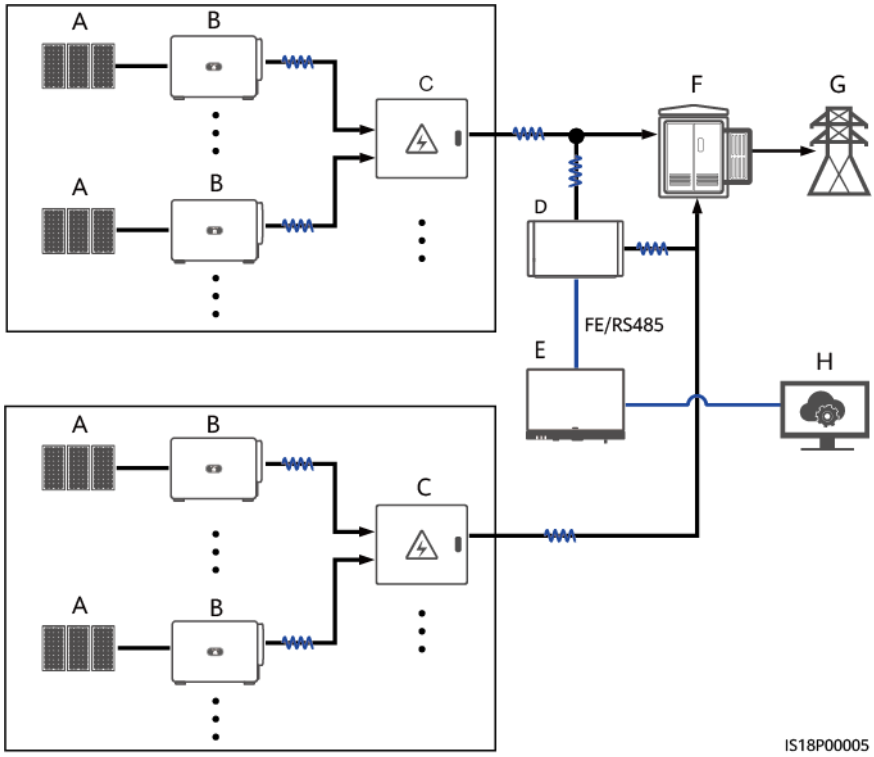

(A) PV strings | (B) SUN2000s | (C) AC combiner box

(D) SmartMBUS CCO01B | (E) SmartLogger | (F) Transformer station

(G) Power grid | (H) Management system | -

Figure 2-5 RS485 networking application (SmartLogger)

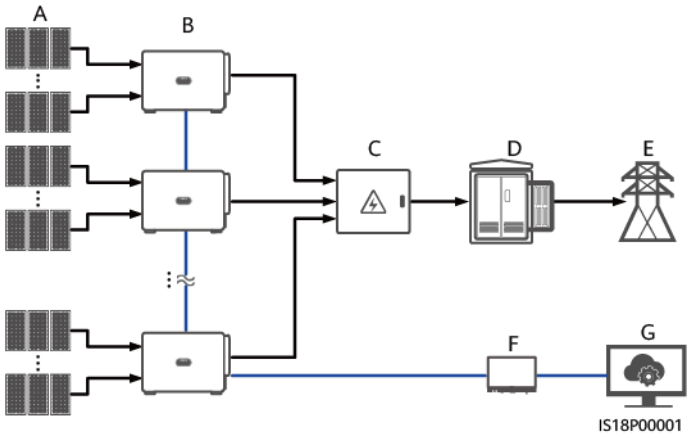

(A) PV strings | (B) SUN2000s | (C) AC combiner box

(D) Transformer station | (E) Power grid | (F) SmartLogger

(G) Management system | - | -

 Copyright © Huawei Technologies Co., Ltd.

Figure 2-6 MBUS networking application (Smart Dongle)

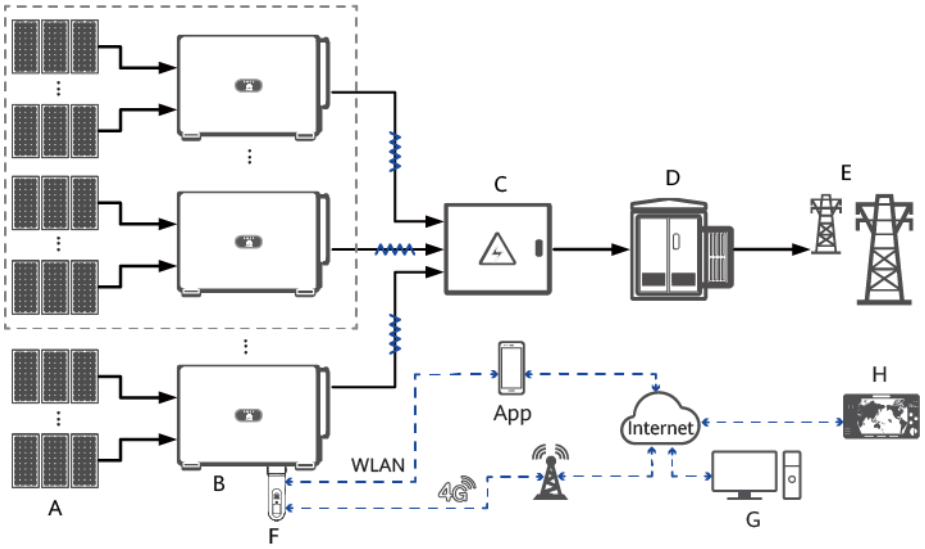

(A) PV strings
(B) SUN2000s
(C) AC combiner box
(D) Transformer station
(E) Power grid
(F) Smart Dongle
(G) WebUI
(H) Management system
-

Figure 2-7 RS485 networking application (Smart Dongle)

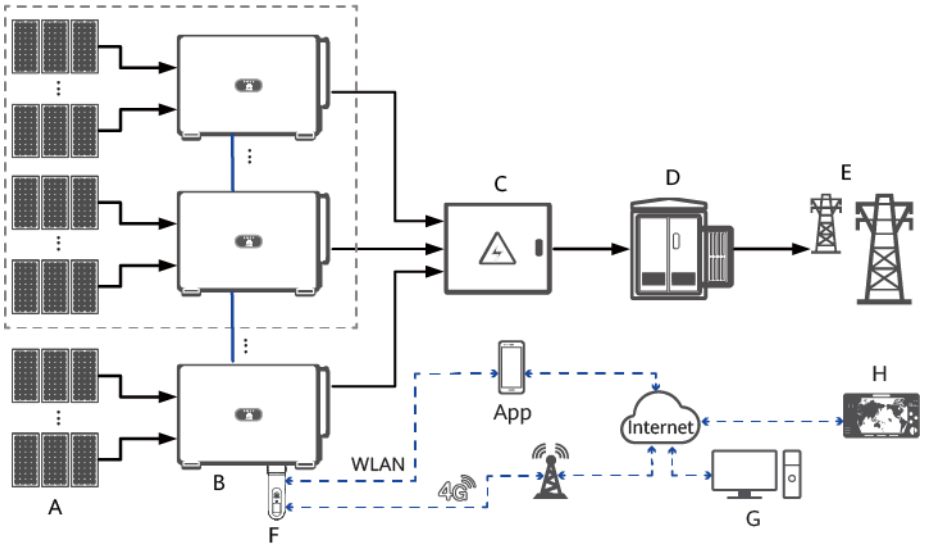

(A) PV strings
(B) SUN2000s
(C) AC combiner box
(D) Transformer station
(E) Power grid
(F) Smart Dongle
(G) WebUI
(H) Management system
-

Copyright © Huawei Technologies Co., Ltd.

NOTICE

- To ensure the system response speed, you are advised to connect less than 30 cascaded SUN2000s on each COM port of the SmartLogger.
- If RS485 communication is used, the RS485 communication distance between the SUN2000 at the end and the SmartLogger cannot exceed 1000 m.
- If MBUS communication is used, multi-core cables are recommended and the maximum communication distance is 1000 m. If single-core cables are used, the three-phase cables must be bound at an interval of 1 m (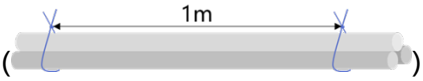

) and the maximum communication distance is 400 m. (When the SmartMBUS CCO01B is configured, the maximum single-core cable communication distance is 750 m, and the distance between the CCO and the busbar sampling cable of the transformer station cannot exceed 3 m.)
- You are advised not to upgrade the software or export logs in fast scheduling scenarios.
- Software upgrade and log export are not supported when the app is connected to the Smart Dongle.

NOTE

- The SUN2000 must be connected to a dedicated power transformer and cannot be connected to a low-voltage overhead power cable.
- The SUN2000-250KTL-H1, SUN2000-250KTL-H3, SUN2000-280KTL-H0, SUN2000-300KTL-H0, SUN2000-330KTL-H1, and SUN2000-330KTL-H2 inverters described in this document must not be connected to a winding (of the transformer station) that has other models of inverters connected to it.

Earthing System

The SUN2000 supports the IT earthing system.

Figure 2-8 Earthing system

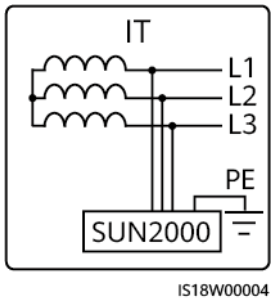

NOTE

The SUN2000 supports the IT earthing system in PV-only scenarios. The use of the SUN2000 in other types of earthing systems, such as TT, TN-C, and TN-C-S, is not recommended. (If such an earthing system is encountered, contact the Company's engineers.)

Copyright © Huawei Technologies Co., Ltd.

2.3 Appearance

Appearance and Ports

Figure 2-9 Appearance

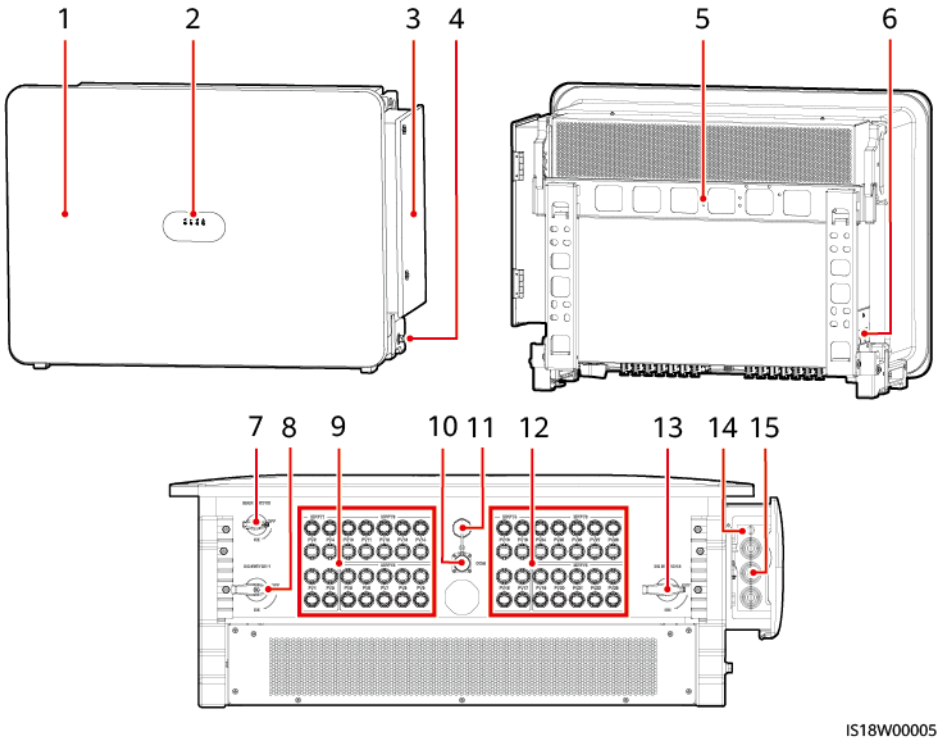

(1) Panel	(2) LED indicators
(3) Maintenance compartment door	(4) Ground point on the enclosure
(5) Mounting bracket	(6) Fan tray
(7) Auxiliary switch (AUX. SWITCH)[1]	(8) DC switch 1 (DC SWITCH 1)
(9) DC input terminal group 1 (PV1–PV14, controlled by DC SWITCH 1)	(10) RS485 communications port (COM)
(11) USB port (USB)	(12) DC input terminal group 2 (PV15–PV28, controlled by DC SWITCH 2)
(13) DC switch 2 (DC SWITCH 2)	(14) Tracking system power cable hole
(15) AC output power cable holes	-

NOTE

Note [1]: The silkscreen on some models is MAIN SWITCH. The actual product silkscreen may vary.

Copyright © Huawei Technologies Co., Ltd.

Indicator Description

Indicator	Status (Blinking Fast: On for 0.2s and Off for 0.2s; Blinking Slowly: On for 1s and Off for 1s)	Meaning
PV connection indicator 	Steady red	If the alarm/maintenance indicator is steady red, an internal fault at the DC side of the SUN2000 is generated.
	Steady green	At least one PV string is properly connected, and the DC input voltage of the corresponding MPPT circuit is higher than or equal to 500 V.
	Blinking green fast	If the alarm/maintenance indicator is red, an environmental fault at the DC side of the SUN2000 was generated.
	Off	The SUN2000 disconnects from all PV strings, or the DC input voltages of all MPPT circuits are less than 500 V.
Grid connection indicator 	Steady red	If the alarm/maintenance indicator is steady red, an internal fault at the AC side of the SUN2000 is generated.
	Steady green	The SUN2000 is in grid-tied mode.
	Blinking green fast	If the alarm/maintenance indicator is red, an environmental fault at the AC side of the SUN2000 was generated.
	Off	The SUN2000 is not in grid-tied mode.
Communication indicator 	Blinking green fast	The SUN2000 receives communication data normally.
	Off	The SUN2000 has not received communication data for 10 seconds.

Copyright © Huawei Technologies Co., Ltd.

Indicator	Status (Blinking Fast: On for 0.2s and Off for 0.2s; Blinking Slowly: On for 1s and Off for 1s)		Meaning
Alarm/Maintenance indicator  	Alarm state	Steady red	A major alarm was generated. ● If the PV connection indicator or grid connection indicator is blinking green fast, troubleshoot DC or AC environmental faults as instructed by the app. ● If the PV connection indicator and grid connection indicator are both not blinking green fast, replace components or the device as instructed by the app. (Upon the first power-on, after you turn on the **AUX. SWITCH**, the PV connection indicator is steady green and the alarm indicator is steady red. This is normal and no alarm needs to be handled.)
		Blinking red fast	A minor alarm was generated.
		Blinking red slowly	A warning alarm was generated.
	Local maintenance state	Steady green	The local maintenance is successful.
		Blinking green fast	The local maintenance failed.
		Blinking green slowly	The device is under local maintenance or shut down after receiving a command.

NOTE

- The PV connection indicator and the grid connection indicator preferentially indicate environmental faults.
- Local maintenance refers to operations performed after a USB flash drive, WLAN module, or USB data cable is inserted into the USB port of the SUN2000. For example, export data using a USB flash drive, or connect to the app using a WLAN module or USB data cable.
- If the alarming and the local maintenance happen concurrently, the alarm/maintenance indicator shows the local maintenance state first. After the USB flash drive, WLAN module, or USB data cable is removed, the indicator shows the alarm state.

 Copyright © Huawei Technologies Co., Ltd.

DC SWITCH

DANGER

- If the DC SWITCH automatically turns off and the inverter generates a **String Reverse Connection**, **String Current Backfeed**, or **String Voltage High** alarm, rectify the fault based on the alarm handling suggestions. After the fault is rectified, wait for at least 3 minutes, turn the switch handle to **OFF** to complete the reset, and then turn it on. For details, see **Resetting and Turning On the DC SWITCH**.
- The DC SWITCH automatically turns off if a fault occurs in the SUN2000. In this case, the alarm/maintenance indicator is steady red and at least one of the PV connection indicator and grid connection indicator is steady red. Then, contact technical support and do not turn on the DC SWITCH by yourself.

Table 2-1 DC SWITCH description

Switch	Description	
DC SWITCH	**ON**	The DC SWITCH is on and can turn off for protection.
	TRIP	The DC SWITCH is automatically turned off. (The switch handle is between **ON** and **OFF**.)
	OFF	The DC SWITCH is off.

Figure 2-10 DC SWITCH

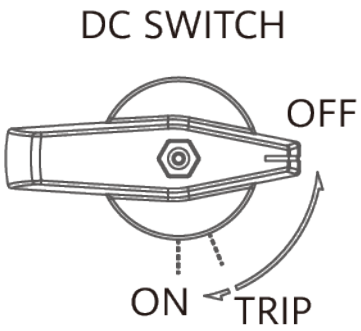

2.4 Circuit Diagram

The SUN2000 receives inputs from 28 PV strings. The inputs are grouped into 6 MPPT circuits inside the SUN2000 to track the maximum power point of the PV strings. The DC power is converted into three-phase AC power through an inverter circuit. Surge protection is supported on both the DC and AC sides.

Copyright © Huawei Technologies Co., Ltd.

Figure 2-11 Circuit diagram

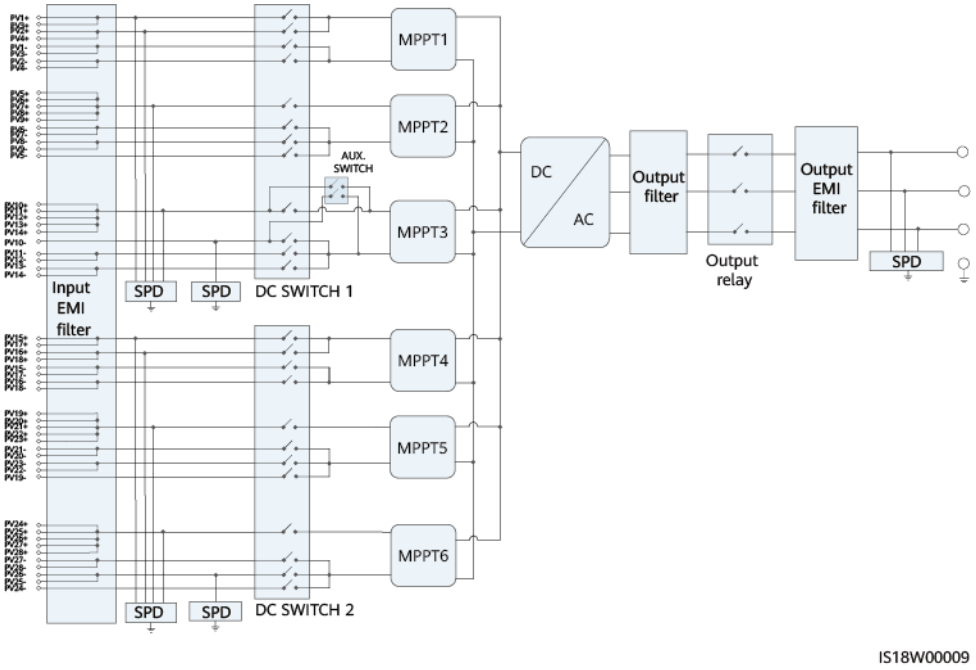

2.5 Working Modes

The SUN2000 can work in Standby, Operating, or Shutdown mode.

Figure 2-12 Working modes

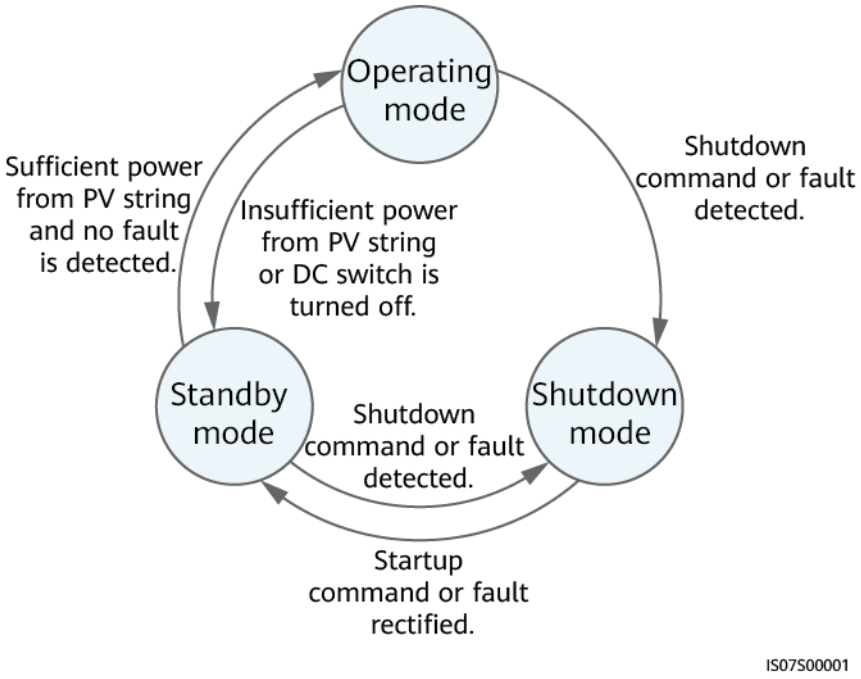

 Copyright © Huawei Technologies Co., Ltd.

Table 2-2 Working mode description

Working Mode	Description
Standby	The SUN2000 enters Standby mode when the external environment does not meet the operating requirements. In Standby mode: • The SUN2000 continuously performs status check and enters the Operating mode once the operating requirements are met. • The SUN2000 enters Shutdown mode after detecting a shutdown command or a fault after startup.
Operating	In Operating mode: • The SUN2000 converts DC power from PV strings into AC power and feeds the power to the power grid. • The SUN2000 tracks the maximum power point to maximize the PV string output. • If the SUN2000 detects a fault or a shutdown command, it enters the Shutdown mode. • The SUN2000 enters Standby mode after detecting that the PV string output power is not suitable for connecting to the power grid for generating power.
Shutdown	• In Standby or Operating mode, the SUN2000 enters Shutdown mode after detecting a fault or shutdown command. • In Shutdown mode, the SUN2000 enters Standby mode after detecting a startup command or that the fault is rectified.

2.6 Label Description

Symbol	Name	Meaning
	Operation warning	Potential hazards exist after the inverter is powered on. Take protective measures when operating the inverter.
	High temperature hazard	Do not touch the inverter when it is running because its enclosure is hot.
	Electric shock hazard	Hazardous voltage exists after the device is powered on. Take protective measures during operation and maintenance (O&M).

Copyright © Huawei Technologies Co., Ltd.

Symbol	Name	Meaning
	Delayed discharge	• High voltage exists after the inverter is powered on. Only qualified and trained electrical technicians are allowed to perform operations on the inverter. • Residual voltage exists after the inverter is powered off. It takes 15 minutes for the inverter to discharge to the safe voltage.
	Refer to documentation	Reminds operators to refer to the documentation for the device. Losses caused by operations that do not comply with the requirements of site selection, storage, or mounting specified in the user manual are not covered under the warranty.
	Grounding	Indicates the position for connecting the ground cable.
	Operation warning	Do not remove the DC input connector when the inverter is running.
	Fan operation warning	High voltage exists after the inverter is powered on. Do not touch the fans when the inverter is working.
	Fan replacement warning	Before replacing the fan, disconnect its power connector.
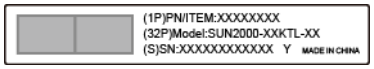	Inverter SN label	Indicates the inverter serial number.
	Weight label	The inverter needs to be carried by four persons or using a forklift.
	DC switch operation warning	After a DC switch is automatically turned off, do not directly reset or turn on the DC switch. Instead, follow the instructions in the section "Resetting and Turning On the DC SWITCH" in the user manual, or contact after-sales service personnel.

 Copyright © Huawei Technologies Co., Ltd.

Symbol	Name	Meaning
	Warning for inserting or removing a DC terminal	Internal high voltage. To remove or insert a DC terminal, perform the following steps: Send a shutdown command. → Turn off the AC switch. → Turn off all DC switches. → Use a clamp meter to check that the PV strings have no current. → Remove or insert the DC terminal.

 Copyright © Huawei Technologies Co., Ltd.

5 Electrical Connections

5.1 Precautions

DANGER

When exposed to sunlight, the PV arrays supply DC voltage to the inverter. Before connecting cables, ensure that all **DC SWITCH** on the inverter are OFF. Otherwise, the high voltage of the inverter may result in electric shocks.

DANGER

- The site must be equipped with qualified fire fighting facilities, such as fire sand and carbon dioxide fire extinguishers.
- Wear personal protective equipment and use dedicated insulated tools to avoid electric shocks or short circuits.

WARNING

- The equipment damage caused by incorrect cable connections is beyond the warranty scope.
- Only certified electrician can perform electrical terminations.
- Operation personnel must wear PPE when connecting cables.
- Before connecting cables to ports, leave enough slack to reduce the tension on the cables and prevent poor cable connections.

 Copyright © Huawei Technologies Co., Ltd.

CAUTION

- Stay away from the equipment when preparing cables to prevent cable scraps from entering the equipment. Cable scraps may cause sparks and result in personal injury and equipment damage.
- When routing PV cables whose pipe is less than 1.5 m long, the positive and negative PV string cables shall be routed in different pipes to prevent cable damage and short circuits caused by improper operations during construction.

Figure 5-1 Cable routing in different pipes

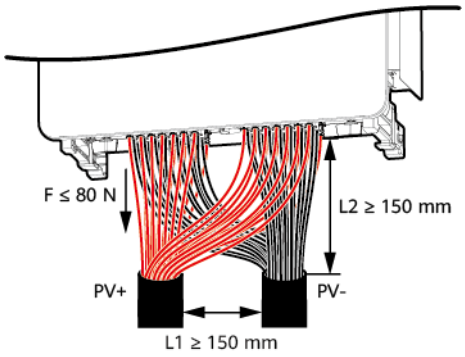

NOTE

The cable colors shown in the electrical connection diagrams provided in this section are for reference only. Select cables in accordance with local cable specifications (green-and-yellow cables are only used for protective earthing).

 Copyright © Huawei Technologies Co., Ltd.

5.2 Preparing Cables

Figure 5-2 Cable connections (configure the components in the dotted box as required)

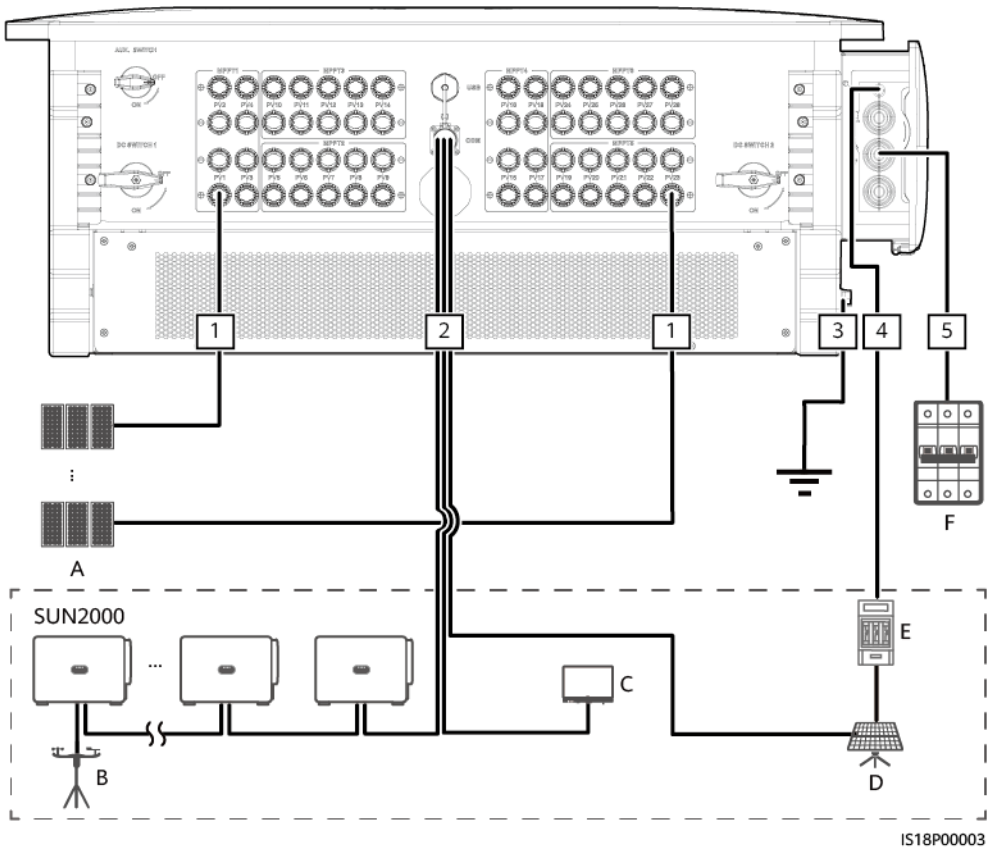

Table 5-1 Component description

No.	Component	Description	Source
A	PV string	• A PV string consists of PV modules connected in series. • The SUN2000 supports 28 PV string inputs.	Prepared by the customer
B	Environmental monitoring instrument (EMI)	When the SmartLogger is used, the EMI can be directly connected to the SmartLogger or connected to the last SUN2000 cascaded over RS485.	Prepared by the customer
C	SmartLogger	The SUN2000 communicates with the management system through the SmartLogger.	Purchased from the Company
D	Tracking system	The angle of trackers can be adjusted.	Prepared by the customer

Copyright © Huawei Technologies Co., Ltd.

No.	Component	Description	Source
E	Fuse/Circuit breaker	The tracking system should be equipped with an overcurrent protection device or component. The power cable between the device or component and the wiring terminal should be shorter than or equal to 2.5 m. A fuse or a circuit breaker is recommended. • Installed between the SUN2000 and tracking control box • Fuse specifications: rated voltage ≥ 800 V; rated current: 16 A; protection: gG • Circuit breaker specifications: rated voltage ≥ 800 V; rated current: 16 A; tripping: C	Prepared by the customer
F	AC switch	To ensure that the SUN2000 can be safely disconnected from the power grid when an exception occurs, connect an AC switch to the AC side of the SUN2000. Select an appropriate AC switch in accordance with local industry standards and regulations. • Installed in the AC combiner box • Recommended: a three-phase AC circuit breaker with a rated voltage greater than or equal to 800 V AC and a rated current of 400 A	Prepared by the customer
G	Smart Dongle	SDongleB-06 is supported.	Purchased from the Company

NOTICE

The SUN2000 has an internal residual current monitoring unit (RCMU). Its external AC switch should be a three-phase circuit breaker or any other AC load circuit breaker to safely disconnect the SUN2000 from the power grid.

NOTE

- The cable diameter must comply with local cable standards.
- The factors that affect cable selection include the rated current, cable type, routing mode, ambient temperature, and maximum expected line loss.

Copyright © Huawei Technologies Co., Ltd.

Table 5-2 Cable description (S indicates the conductor cross-sectional area of the AC output cable, and S_p indicates the conductor cross-sectional area of the PE cable)

No.	Cable	Type	Conductor Cross-Sectional Area	Outer Diameter	Source
1	DC input power cable	1500 V copper multi-strand twisted PV cable [1][2]	4–6 mm^2	5–7.8 mm	Prepared by the customer
2	RS485 communications cable	Outdoor shielded twisted pair cable that meets the local standard	0.25–1 mm^2	• One or two communications cables: 4–11 mm • Three communications cables: 4–8 mm	Prepared by the customer
3	PE cable[3]	Single-core outdoor copper cable and M10 OT/DT terminal	$S_p \geq S/2$	-	Prepared by the customer
4	Tracking system power cable	Three-core outdoor copper cable with two layers of protection and M4 OT terminal	10 mm^2	15–18 mm	Prepared by the customer
5	AC output power cable (single-core)	(Recommended) Single-core outdoor cable and M12 OT/DT terminal	• Copper cable: – S: 120–400 mm^2 – $S_p \geq S/2$ • Aluminum alloy cable or copper-clad aluminum cable: – S: 150–400 mm^2 – $S_p \geq S/2$	14–40 mm	Prepared by the customer

 Copyright © Huawei Technologies Co., Ltd.

No.	Cable	Type	Conductor Cross-Sectional Area	Outer Diameter	Source
	AC output power cable (multi-core) [4]	• If the ground point on the enclosure is used, three-core (L1, L2, and L3) outdoor cables and M12 OT/DT terminals (L1, L2, and L3) are recommended. • If the ground point in the maintenance compartment is used, four-core (L1, L2, L3, and PE) outdoor cables, M12 OT/DT terminals (L1, L2, and L3), and M10 OT/DT terminals (PE) are recommended. You do not need to prepare a PE cable.	• Copper cable: – S: 120–240 mm^2 – $S_p \geq S/2$ • Aluminum alloy cable or copper-clad aluminum cable: – S: 150–240 mm^2 (cable stripping inside the compartment); S: 300–400 mm^2 (cable stripping outside the compartment supported when protection is added) – $S_p \geq S/2$	24–66 mm	Prepared by the customer

- Note [1]: Do not connect aluminum or aluminum alloy DC power cables directly to the DC terminals of the inverter.
- Note [2]: The 1500 V PV cables must comply with IEC 62930 or EN 50618.
- Note [3]: The value of S_p is valid only if the conductors of the PE cable and AC power cable use the same material. If the materials are different, ensure that the conductor cross-sectional area of the PE cable produces a conductance equivalent to that specified in this table. The specifications of the PE cable are subject to this table or calculated according to IEC 60364-5-54.
- Note [4]: For details about the installation procedure and precautions for cable stripping outside the compartment, see **5.5 Requirements for AC Power Cable Stripping Outside the Compartment**.

Copyright © Huawei Technologies Co., Ltd.

5.3 Connecting a PE Cable

Precautions

- Preferentially connect the PE cable for the SUN2000 to the ground point on the enclosure. The ground point in the maintenance compartment is used for connecting to the PE wire of a multi-core AC power cable.
- It is recommended that the SUN2000 be connected to a nearby ground point. For a system with multiple SUN2000s connected in parallel, connect the ground points of all SUN2000s to ensure equipotential bonding between PE cables.

Procedure

Step 1 Connect the PE cable to the ground point. To enhance the corrosion resistance of a ground terminal, apply silicone grease or paint on it after connecting the PE cable to the ground point on the enclosure.

Figure 5-3 Connecting a PE cable to the ground point (on the enclosure)

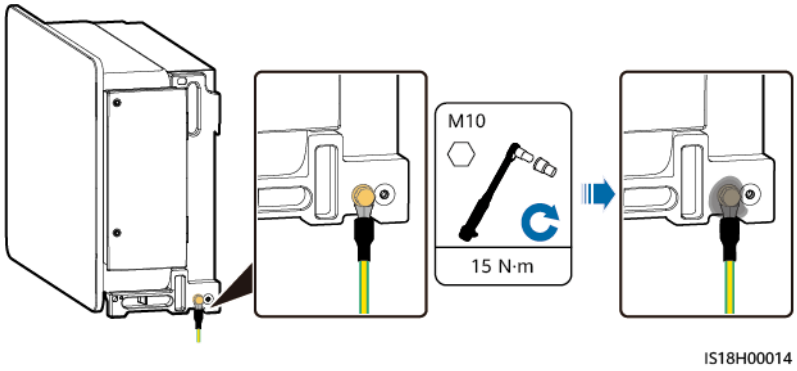

----End

5.4 Connecting an AC Output Power Cable

Precautions

- A three-phase AC switch should be installed on the AC side of the SUN2000. To ensure that the SUN2000 can safely disconnect itself from the power grid when an exception occurs, select a proper overcurrent protection device in compliance with local power distribution regulations.
- The SUN2000 is integrated with a comprehensive residual current detection unit to distinguish fault current from residual current. Upon detecting that the residual current exceeds the threshold, the SUN2000 immediately disconnects from the power grid.

Copyright © Huawei Technologies Co., Ltd.

WARNING

- Do not connect loads between an inverter and an AC switch that directly connects to the inverter. Otherwise, the switch may trip by mistake.
- If an AC switch is used with specifications beyond local standards, regulations, or the Company's recommendations, the switch may fail to turn off in a timely manner in case of exceptions, causing serious faults.
- Do not open the panel of the SUN2000.
- Before opening the maintenance compartment door, ensure that no electrical connections are made for the SUN2000 on the AC or DC side.
- Do not open the maintenance compartment door on rainy or snowy days. If you need to, take protective measures to prevent rain or snow from entering the maintenance compartment. If protective measures cannot be taken, do not open the maintenance compartment door.
- Do not leave unused screws in the maintenance compartment.

CAUTION

Each inverter shall be equipped with an AC output switch. Multiple inverters shall not connect to the same AC switch.

NOTICE

- The cable outer diameter can be measured using the ruler sticker in the maintenance compartment.
- Ensure that the cable jacket is in the maintenance compartment.
- Ensure that the AC output power cables are connected securely and insulated properly (using three-way breakout boots and cold/heat shrink tubing). Otherwise, the SUN2000 may fail to operate, or become overheated during operation due to an unreliable connection, which will damage the terminal block. The resulting device damage is not covered by the warranty.
- In the quick scheduling scenario with MBUS communication networking, connect AC power cables in the maintenance compartment from left to right in the sequence of L1, L2, and L3.

Copyright © Huawei Technologies Co., Ltd.

Table 5-3 Bending radius requirements for AC power cables

Picture	Single-core Cable		Three-core or Four-core Cable	
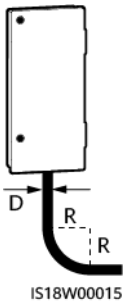	Unarmored	Armored	Unarmored	Armored
	R ≥ 20D	R ≥ 15D	R ≥ 15D	R ≥ 12D
	R indicates the bending radius, and D indicates the outer diameter of the cable. **NOTE** The AC power cable must be routed vertically into the maintenance compartment.			

Wiring Area

Figure 5-4 Wiring ports

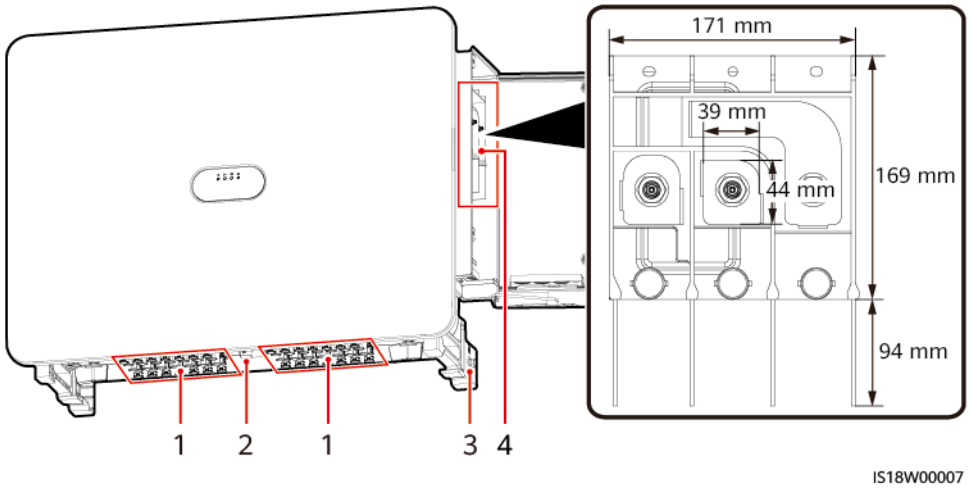

(1) DC input terminals
(2) RS485 communications port
(3) Ground point on the enclosure
(4) AC terminal block

Procedure

Step 1 Open the maintenance compartment door and install the support strut. Remove the accessories and set them aside.

Copyright © Huawei Technologies Co., Ltd.

Figure 5-5 Opening a maintenance compartment door

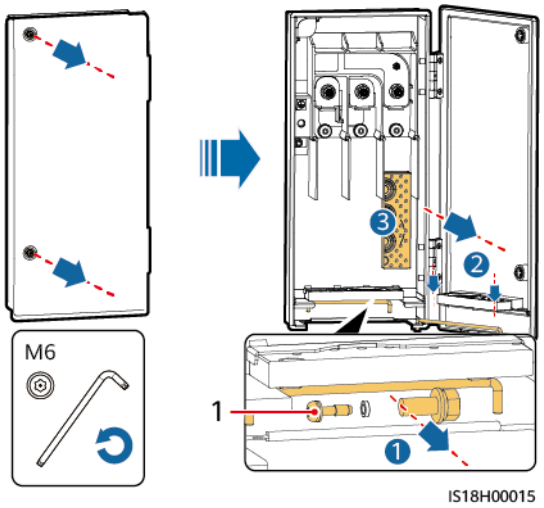

(1) Position for binding the ground screw

Step 2 Connect the AC output power cables based on the cable type.

Figure 5-6 Specifications of the crimped OT/DT terminal

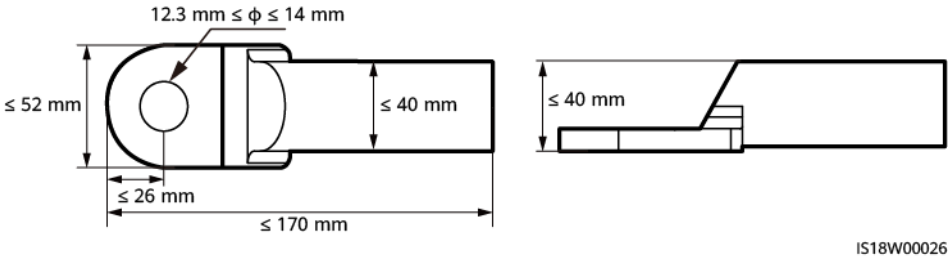

 Copyright © Huawei Technologies Co., Ltd.

Figure 5-7 Cable connection 1

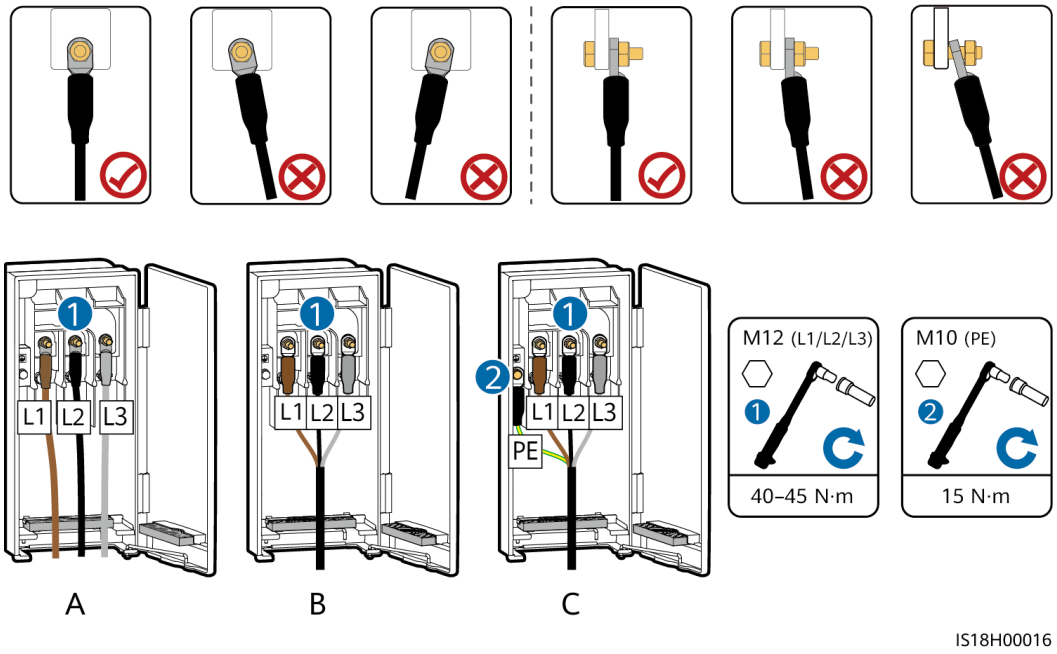

(A) Single-core cables (B) Three-core cable (C) Four-core cable

Figure 5-8 Cable connection 2

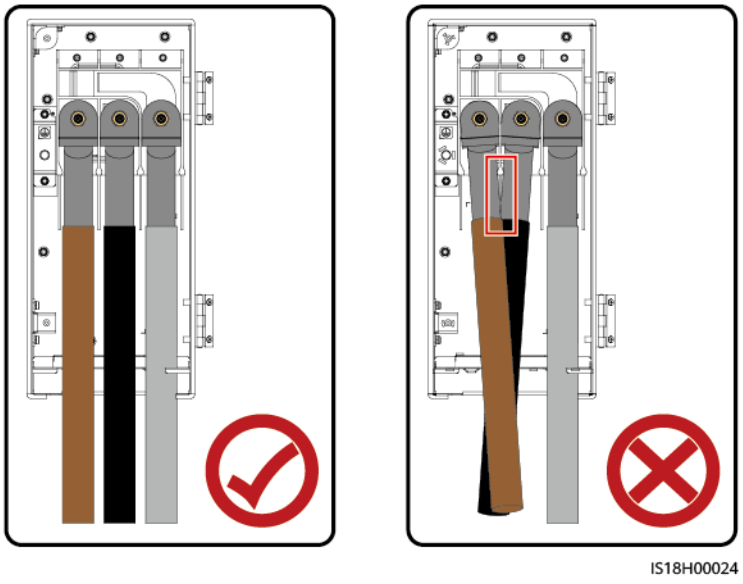

NOTICE

- Reserve sufficient slack for the PE cable to ensure that the last cable bearing the force is the PE cable when the AC output power cable is subject to a pulling force due to force majeure.
- After cables are connected, prevent them from contacting the inter-phase baffle plates.

 Copyright © Huawei Technologies Co., Ltd.

Figure 5-9 Single-core cable connection

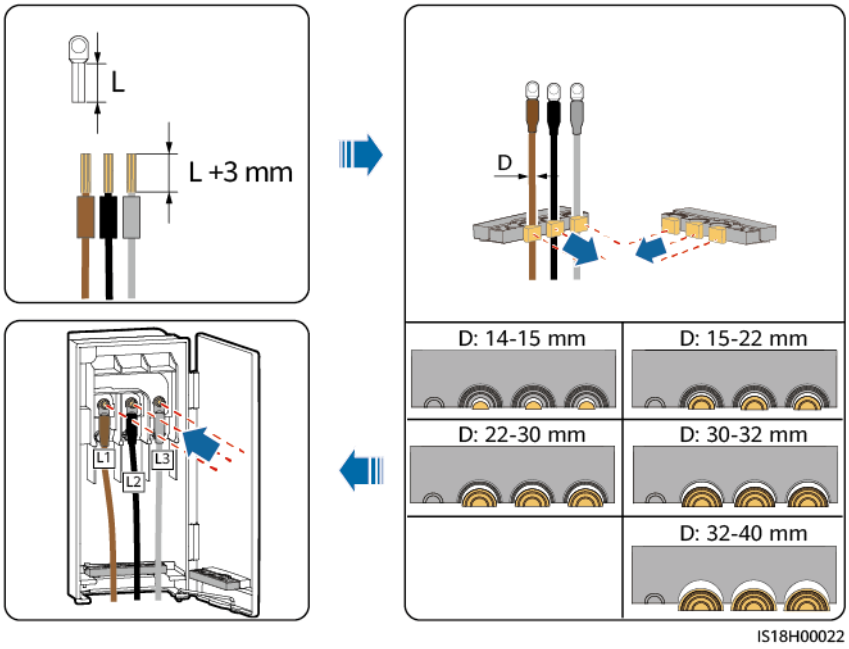

NOTICE

If a multi-core cable is used, it is recommended that the stripping length of the L2 wire be 15 mm shorter than those of the L1 and L3 wires.

Figure 5-10 Multi-core cable connection (using a three-core cable as an example)

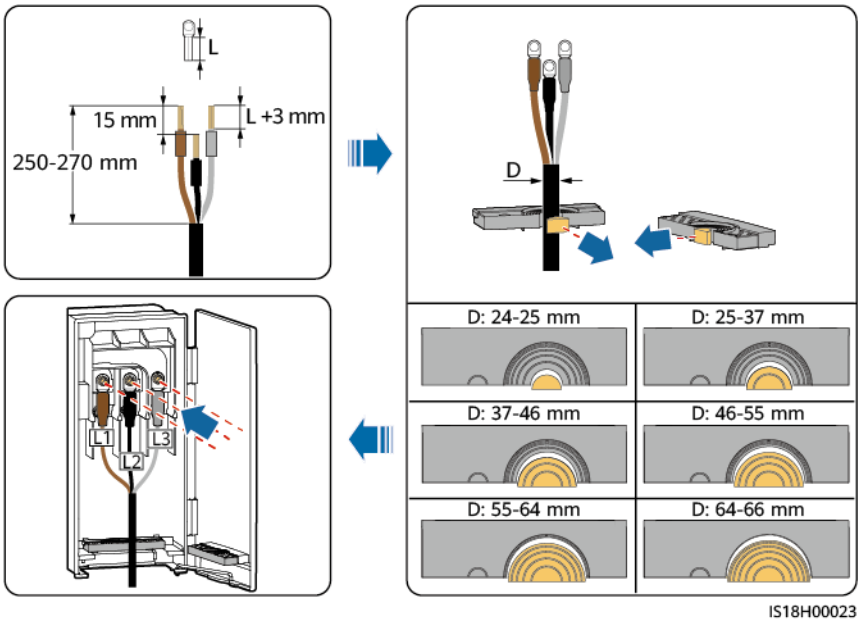

Step 3 If the system is configured with a tracking system, connect the power cable of the tracking system.

 Copyright © Huawei Technologies Co., Ltd.

WARNING

- The tracking system obtains power from the AC three-phase power grid. The rated voltage of the power supply is the rated output voltage of the SUN2000.
- Keep flammable materials away from cables.
- Cables must be protected with a conduit to prevent short circuits caused by insulation layer damage.

Figure 5-11 Connecting a power cable of the tracking system

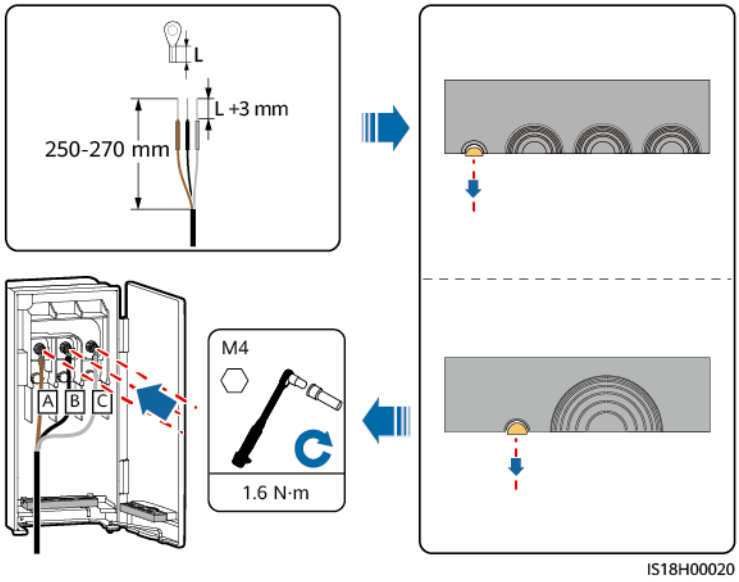

Step 4 Clear foreign matter from the maintenance compartment, close the maintenance compartment door, and check that the cable holes at the bottom of the maintenance compartment are sealed.

Figure 5-12 Closing a door

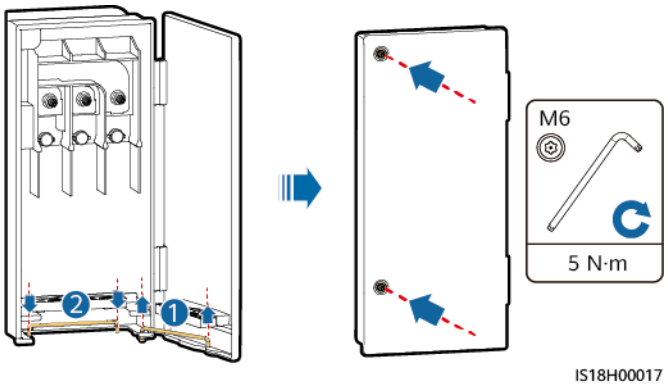

----End

 Copyright © Huawei Technologies Co., Ltd.

5.5 Requirements for AC Power Cable Stripping Outside the Compartment

Materials

Material	Specifications	Source
Cold/Heat shrink tubing	Matches the cable and has anti-ultraviolet radiation performance.	Prepared by the customer
Three-way breakout boot	Matches the cable.	Prepared by the customer
Electrical conduit	• Inner diameter ≥ 1.5 x Cable outer diameter • Material: stainless steel pipe or PVC pipe. Steel pipes cannot be used in corrosive environments. • Anti-ultraviolet radiation	Prepared by the customer
Sealing putty	-	Prepared by the customer

Procedure

Step 1 Strip the AC power cable. The distance between the cable stripping end and the ground must be greater than or equal to 300 mm.

Step 2 Ensure that the cable stripping end is even, wrap it with the insulation tape, and then install the three-way breakout boot and cold/heat shrink tubing.

Step 3 Crimp OT/DT terminals.

Step 4 Cut the electrical conduit to a proper length based on the actual installation height and design requirements. Ensure that the lower end of the electrical conduit is greater than or equal to 300 mm above the ground. Route the AC power cable through the electrical conduit.

Step 5 Adjust the cable and electrical conduit to be vertical. Seal the bottom of the electrical conduit with waterproofing materials. After the waterproofing measure is complete, backfill and compact the ground.

Step 6 Connect the AC power cable.

Step 7 Close the maintenance compartment door, and seal the cable inlet of the maintenance compartment and cable top outlet of the electrical conduit with fireproofing materials.

Copyright © Huawei Technologies Co., Ltd.

NOTICE

- Waterproofing measures must be taken at the bottom of the electrical conduit. The electrical conduit and cable must be vertical. Ensure that the upper end is vertically routed into the maintenance compartment and the lower end is vertically routed into the ground.
- After the electrical conduit is routed into the ground, the underground cable must meet the bending radius requirements of the AC power cable.
- The bottom of the electrical conduit must be sealed with waterproofing materials to prevent water or moisture from entering the electrical conduit and reducing the cable insulation performance.
- Prevent stress on the inverter wiring terminals from the cable during backfilling.
- After stripping the jacket off the three-core cable, route the wires into the inverter maintenance compartment as three single-core cables. Take fireproofing and waterproofing measures at the cable inlet of the maintenance compartment to prevent water or moisture from entering the electrical conduit and reducing the cable insulation performance.
- The armored layer of the cable must be grounded according to the design requirements.
- Wires between the maintenance compartment and electrical conduit must not be exposed to the air. Protective measures must be taken.

Figure 5-13 Cable protection

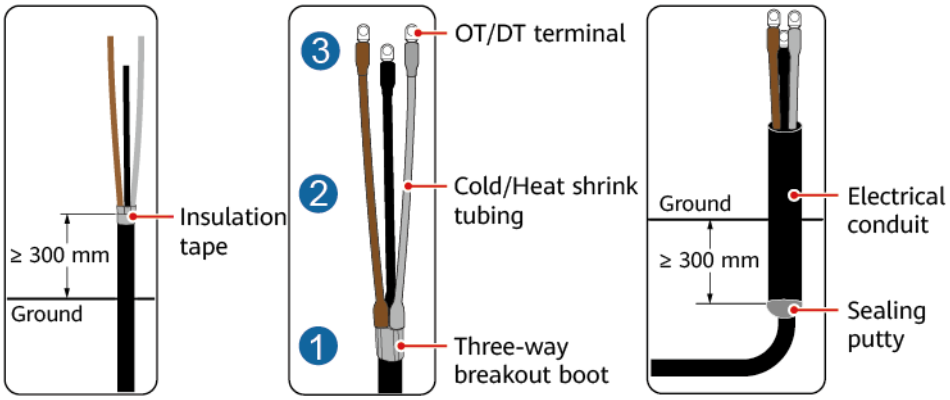

 Copyright © Huawei Technologies Co., Ltd.

Figure 5-14 Installation completed

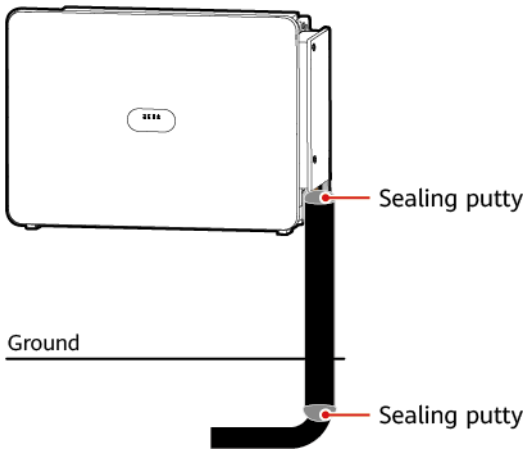

----End

5.6 Connecting DC Input Power Cables

Precautions

DANGER

- Before connecting DC input power cables, ensure that the DC voltage is within the safe range (lower than 60 V DC) and that the **AUX. SWITCH** and all **DC SWITCH** of the SUN2000 are **OFF**. Otherwise, the high voltage may result in electric shocks.
- When the SUN2000 operates in grid-tied mode, do not perform maintenance or operations on the DC input power cables, such as connecting or disconnecting a PV string or a PV module in the PV string. Otherwise, electric shocks or arcing (which may cause fire) may occur.
- For details about how to remove and insert DC input connectors, see **8.3 Power-Off for Maintenance**.

WARNING

Ensure that the following conditions are met. Otherwise, the SUN2000 may be damaged or even a fire may occur.

- The open-circuit voltage of each PV string must be lower than or equal to 1500 V DC under any circumstances.
- The polarities of electric connections must be correct on the DC input side. The positive and negative terminals of a PV string must be connected to corresponding positive and negative DC input terminals of the SUN2000.

Copyright © Huawei Technologies Co., Ltd.

WARNING

During the installation of PV strings and the inverter, the positive or negative terminals of PV strings may be short-circuited to ground if the power cables are not properly installed or routed. In this case, an AC or DC short circuit may occur and damage the inverter. The resulting device damage is not covered under any warranty.

NOTICE

- Ensure that the PV module output is well insulated to ground.
- The PV strings connecting to the same MPPT circuit should use the same model and quantity of PV modules.
- The SUN2000 does not support full parallel connection for PV strings (full parallel connection: PV strings connect to one another in parallel outside the SUN2000 and then connect to it separately).
- The SUN2000 does not support Y-branch PV connectors.

Terminal Description

The SUN2000 provides 28 DC input terminals, which are controlled by its two DC switches. DC SWITCH 1 controls the DC input terminals PV1–PV14 and DC SWITCH 2 controls the DC input terminals PV15–PV28.

Figure 5-15 DC terminals controlled by DC SWITCH 1

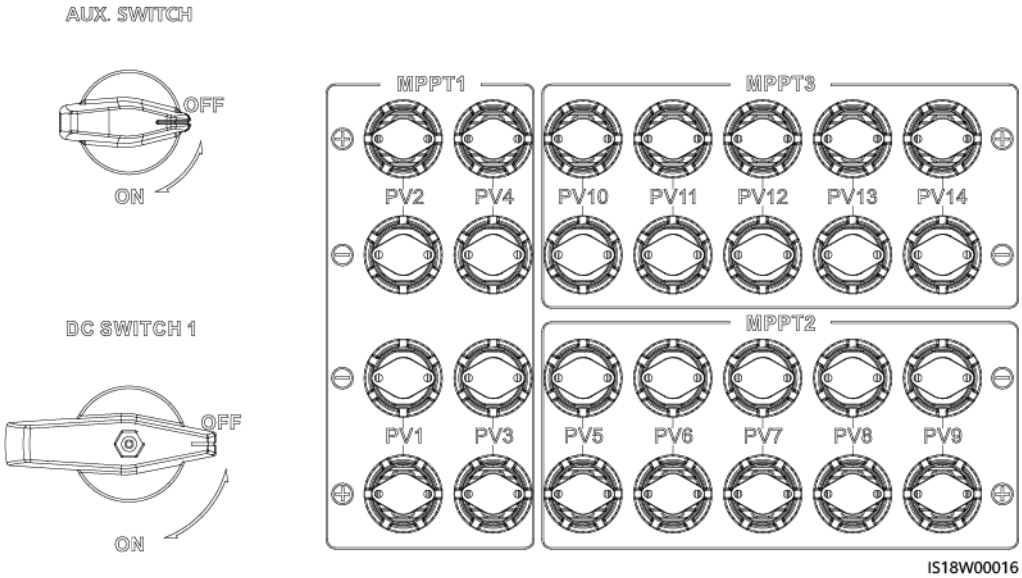

 Copyright © Huawei Technologies Co., Ltd.

Figure 5-16 DC terminals controlled by DC SWITCH 2

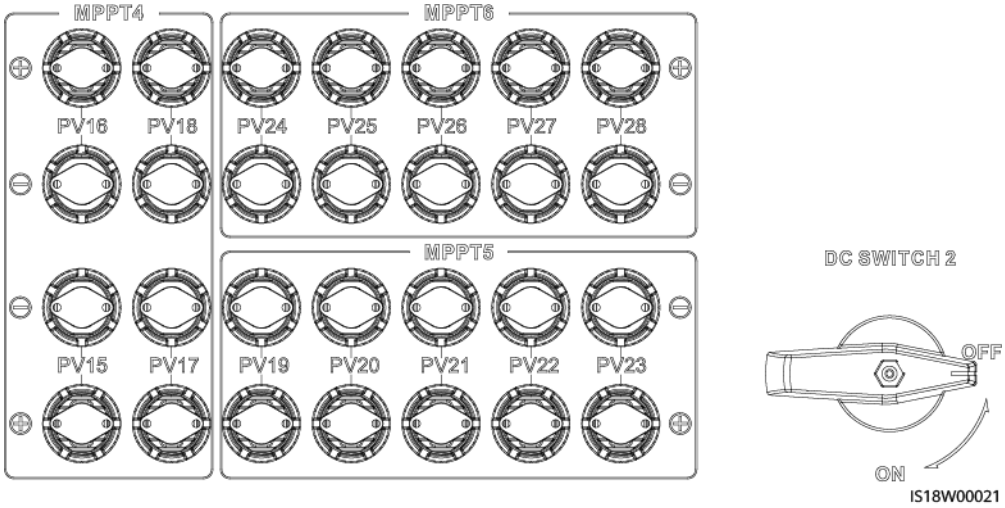

Requirements for selecting DC input terminals:

1. DC input terminal PV10 must be connected to a PV string.
2. At least one PV string is connected to the DC input terminals PV1–PV9.
3. Ensure that PV strings are evenly distributed on each MPPT. If there are 18 to 27 PV strings, connect them according to the following table.
4. If 210 mm PV modules are used, a maximum of four PV strings can be connected to each MPPT.
5. Install sealing plugs on the DC input terminals that are not connected to PV strings. For details, see **Figure 5-19**.

Number of PV Strings	Terminal Selection	Number of PV Strings	Terminal Selection
18	Connect to PV2–PV4, PV7–PV12, PV16–PV18, PV21–PV23, and PV26–PV28. 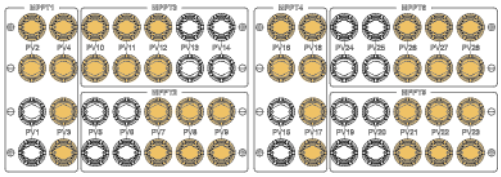	19	Connect to PV2–PV4, PV6–PV12, PV16–PV18, PV21–PV23, and PV26–PV28. 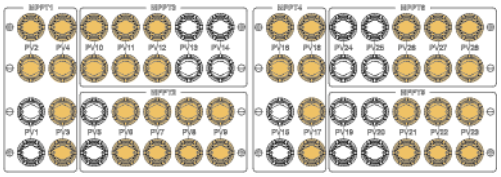
20	Connect to PV2–PV4, PV6–PV12, PV16–PV18, PV21–PV23, and PV25–PV28. 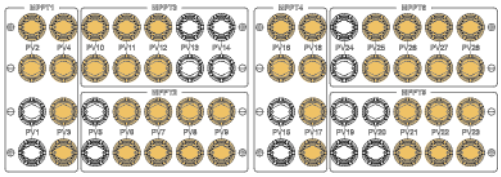	21	Connect to PV2–PV4, PV7–PV13, PV16–PV18, PV20–PV23, and PV25–PV28. 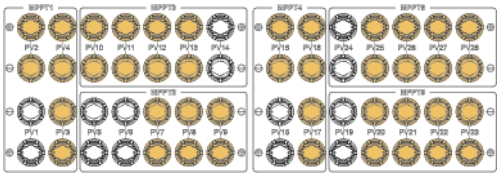

 Copyright © Huawei Technologies Co., Ltd.

Number of PV Strings	Terminal Selection	Number of PV Strings	Terminal Selection
22	Connect to PV2–PV4, PV6–PV13, PV16–PV18, PV20–PV23, and PV25–PV28. 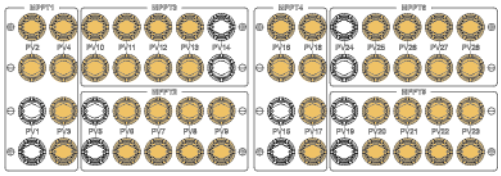	23	Connect to PV1–PV4, PV6–PV13, PV16–PV18, PV20–PV23, and PV25–PV28. 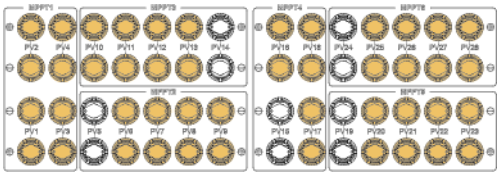
24	Connect to PV1–PV4, PV6–PV13, PV15–PV18, PV20–PV23, and PV25–PV28. 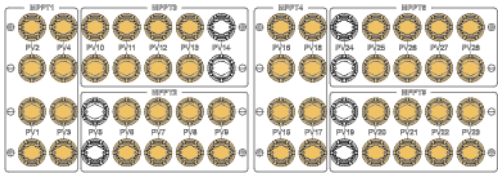	25	Connect to PV1–PV4, PV6–PV18, PV20–PV23, and PV25–PV28. 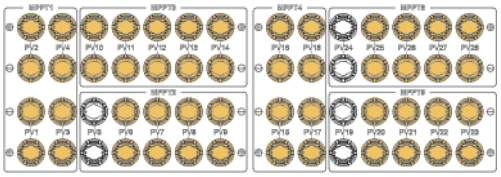
26	Connect to PV1–PV18, PV20–PV23, and PV25–PV28. 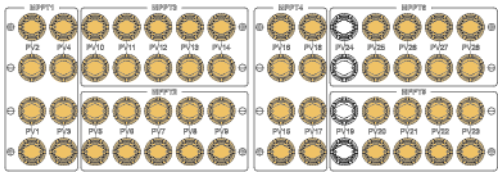	27	Connect to PV1–PV18 and PV20–PV28. 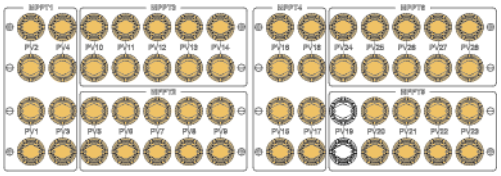

Copyright © Huawei Technologies Co., Ltd.

Procedure

NOTICE

- For the SUN2000-250KTL-H3/280KTL-H0/300KTL-H0, use the CT75A-1T-34/CT75A-1T-35 (AVIC JONHON) PV connectors delivered with the SUN2000. If the PV connectors are lost or damaged, purchase the connectors of the same model. The device damage caused by incompatible PV connectors is not covered under any warranty.
- For the SUN2000-330KTL-H1/330KTL-H2/250KTL-H1, use the HH4SFD4TMS/HH4SMD4TMS (AMPHENOL) PV connectors delivered with the SUN2000. If the PV connectors are lost or damaged, purchase the connectors of the same model. The device damage caused by incompatible PV connectors is not covered under any warranty.
- AVIC JONHON and AMPHENOL PV connectors cannot be used together.
- The DC voltage measurement range of the multimeter must be at least 1500 V.
- If the voltage is a negative value, the DC input polarity is incorrect. Rectify the connection.
- If the voltage is greater than 1500 V, too many PV modules are connected to the same string. Remove some PV modules.
- Connect the connectors on the PV strings to the connectors on the inverter, and pull back the connectors on the PV strings along the axial direction to check whether the connectors are securely installed.
- Ensure that the connectors are properly connected. Any connector damage due to improper connection is not covered by the warranty.

Step 1 Before connecting PV strings to the SUN2000, ensure that the insulation resistance of each PV string to the ground is normal.

Test method: Use an insulation resistance tester to test the insulation resistance of the PV– cable to the ground. Add a DC voltage of more than 1500 V between the PV– cable and the ground and check the insulation resistance.

- If the insulation resistance is greater than or equal to 1 MΩ, the insulation resistance is normal.
- If the insulation resistance is less than 1 MΩ, troubleshoot the insulation fault of the cable or PV string.

Copyright © Huawei Technologies Co., Ltd.

Figure 5-17 Testing the insulation resistance

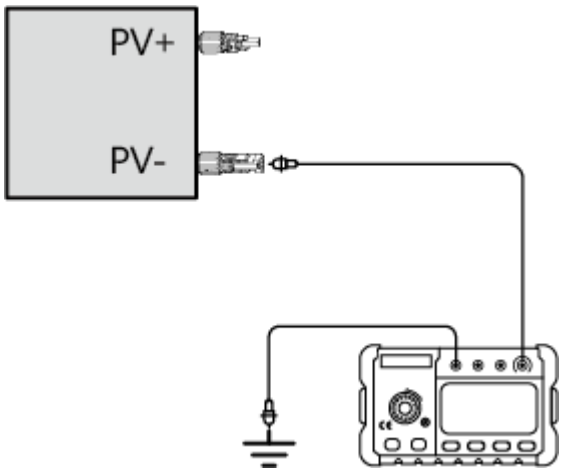

Step 2 Connect DC input power cables.

Figure 5-18 Connecting DC input power cables

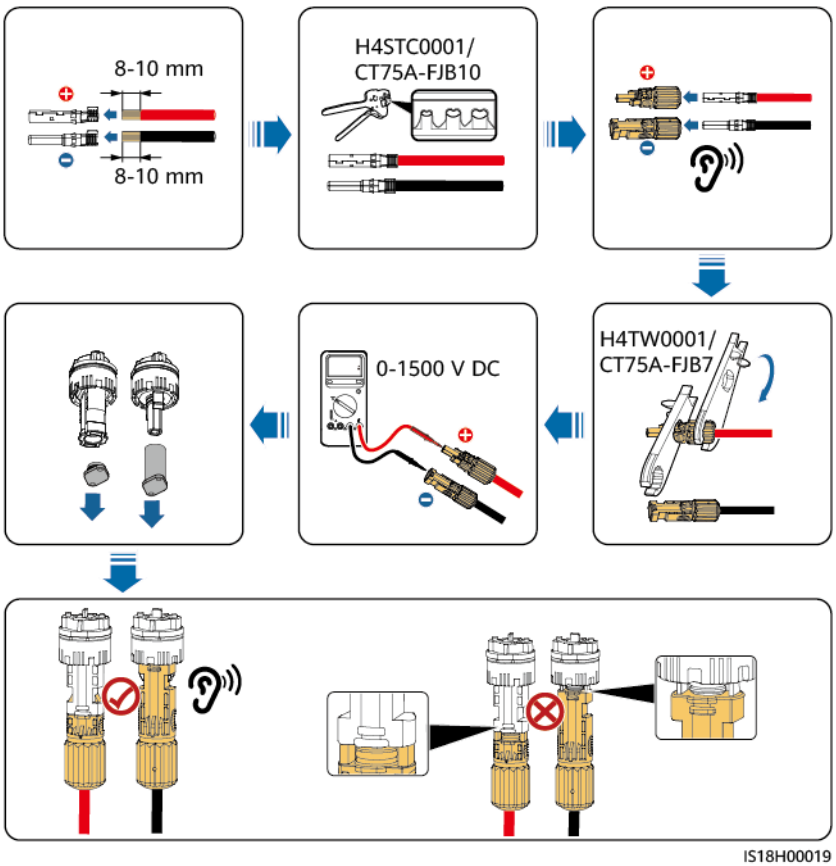

NOTICE

When installing DC input power cables, leave at least 150 mm of slack. The axial tension on PV connectors must not exceed 80 N. Radial stress or torque must not be generated on PV connectors.

 Copyright © Huawei Technologies Co., Ltd.

Step 3 If there are DC input terminals that are not connected to PV strings, use sealing plugs with snap-fits (models: CT75A-FJB6/HY024-FHG-3 and CT75A-FJB5/HY024-FHG-4) to seal the terminals. Device damage caused by the absence of sealing plugs is not covered by warranty.

Figure 5-19 Sealing plugs with snap-fits

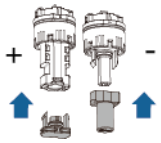

----End

5.7 Connecting Signal Cables

Precautions

When routing communications cables, separate communications cables from power cables to prevent communication from being affected.

COM Port Pin Definitions

Figure 5-20 Communications port

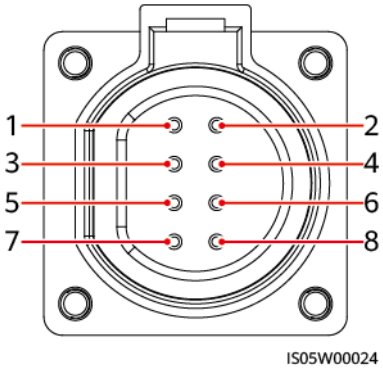

Port	Pin	Definition	Pin	Definition	Description
RS485-1	1	RS485A IN, RS485 differential signal+	2	RS485A OUT, RS485 differential signal+	Used to cascade SUN2000s or connect devices such as the SmartLogger.
	3	RS485B IN, RS485 differential signal–	4	RS485B OUT, RS485 differential signal–	
PE	5	PE, shield layer grounding	6	PE, shield layer grounding	-
RS485-2	7	RS485A, RS485 differential signal+	8	RS485B, RS485 differential signal–	Used to connect an RS485 slave device.

Copyright © Huawei Technologies Co., Ltd.

Procedure

Step 1 Connect the RS485 communications cables.

Figure 5-21 Connecting communications cables

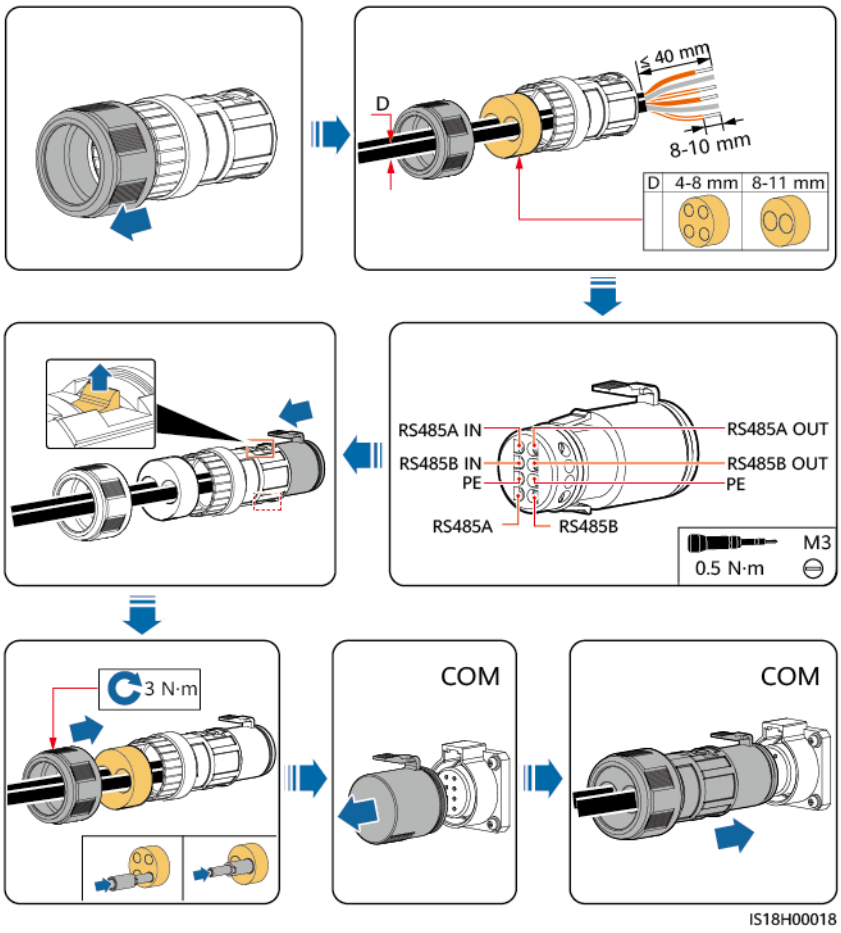

NOTICE

Use a plug to block the unused cable hole with the waterproof rubber ring, and then tighten the locking cap.

----End

Copyright © Huawei Technologies Co., Ltd.

5.8 (Optional) Installing the Smart Dongle

NOTICE

- If your Smart Dongle is not equipped with a SIM card, prepare a standard SIM card by yourself (size: 25 mm x 15 mm) with the capacity greater than or equal to 64 KB.
- When installing the SIM card, determine its installation direction based on the silk screen and arrow on the card slot.
- Press the SIM card in place to lock it, indicating that the SIM card is correctly installed.
- When removing the SIM card, push it inward to eject it.
- When reinstalling the enclosure of the Smart Dongle, ensure that the snap-fits click into place.

Figure 5-22 Installing the 4G Smart Dongle (SDongleB-06)

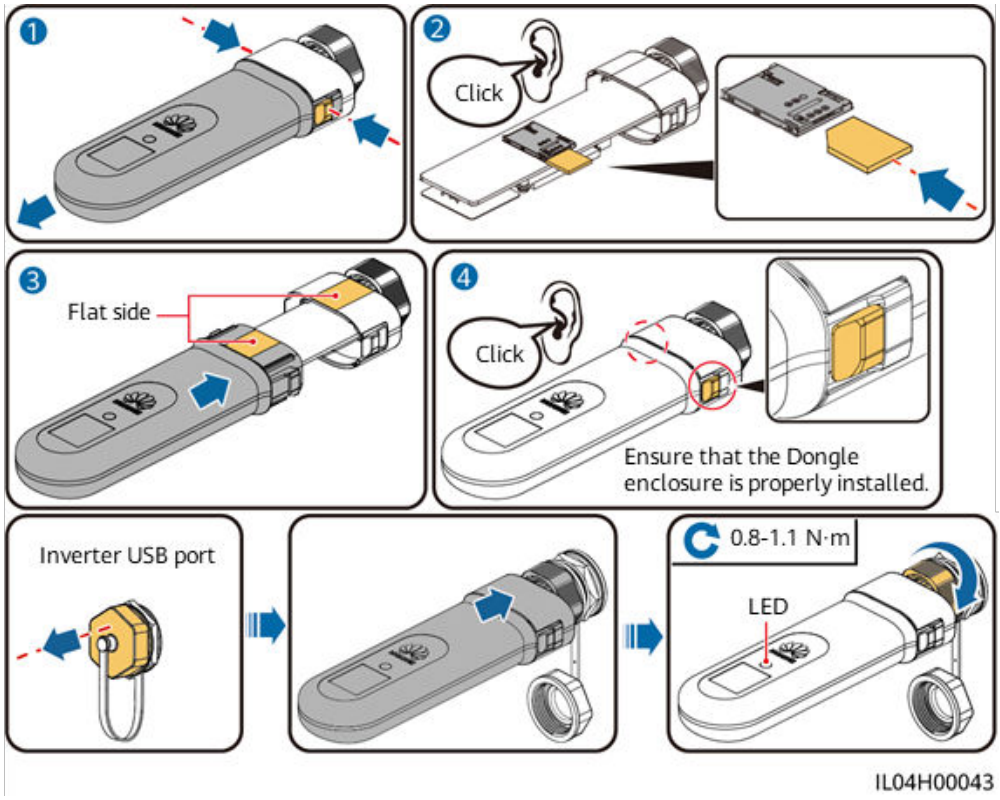

 Copyright © Huawei Technologies Co., Ltd.

Anejo Nº 5

Catálogo de Cables Eléctricos Prysmian

ESTUDIO Y VIABILIDAD DE PRODUCCIÓN DE HIDRÓGENO VERDE A PARTIR DE UN MIX ENERGÉTICO RENOVABLE PARA DESCARBONIZACIÓN DE FLOTA DE AUTOBUSES URBANOS EN VALLADOLID

Catálogo de cables para Baja y Media Tensión



General Cable

A brand of Prysmian Group

Bienvenidos al portafolio de productos y servicios más amplio del mercado

En General Cable, una marca comercial de Prysmian Group, contamos con una dilatada experiencia en el mercado gracias a nuestra **amplia cartera de clientes** que operan en todos los segmentos del mercado energético y las telecomunicaciones, desde la construcción e infraestructura, industrial, aplicaciones especializadas hasta la transmisión de datos. Aumentamos el valor de los productos y de las tecnologías que desarrollamos. El resultado es un **completo portfolio de productos y servicios totalmente único**, que junto a nuestra vocación de **servicio y cercanía** nos convierte en un aliado sólido e indispensable para los clientes que se esfuerzan cada día por competir y crecer.



Símbolos



No propagación de la llama
UNE-EN 60332-1-2; IEC 60332-1-2



No propagación de incendio
UNE-EN 50399
UNE-EN 60332-3-24; IEC 60332-3-24



Baja emisión de calor
UNE-EN 50399



Baja emisión de humos
UNE-EN 50399



Baja opacidad de humos
UNE-EN 61034-2; IEC 61034-2



Reducido desprendimiento
de gotas/partículas inflamadas
UNE-EN 50399



Libre de halógenos
UNE-EN 60754-2; IEC 60754-2
UNE-EN 60754-1; IEC 60754-1



Reducida emisión de gases tóxicos
UNE-EN 60754-2; IEC 60754-2



Baja emisión de gases corrosivos
UNE-EN 60754-2; IEC 60754-2



Obturación longitudinal



Resistencia al fuego
UNE-EN 50200
IEC 60331-1



Flexibilidad aumentada



Sectorflex® conductor sectorial flexible



Protección frente a las interferencias
electromagnéticas



Resistencia a los aceites minerales



Resistencia a la intemperie



Resistencia a las radiaciones UV



Resistencia a muy baja temperatura (°C)



Resistencia mecánica



Protección mecánica contra roedores



Servicios duros



Estanco/sumergible



Instalaciones solares fotovoltaicas



Temperatura máxima del conductor: +70 °C



Temperatura máxima del conductor: +90 °C



Fácil pelado de los cables



Excelente deslizamiento



Resistente al agua

Reglamento de productos de construcción (CPR)

Garantizamos alta calidad en todos nuestros productos y máxima seguridad.

¿Qué es la CPR? El Reglamento de Productos de la Construcción (CPR) detalla las condiciones para la **comercialización de los productos** de la construcción, mediante un **lenguaje técnico común** a aplicar en todo el mercado único de la UE.

Clases de la CPR

La norma EN 50575 define **siete clases** para determinar la reacción al fuego.

CPR A_{ca} CPR $B1_{ca}$ CPR $B2_{ca}$ CPR C_{ca} CPR D_{ca} CPR E_{ca} CPR F_{ca}

Mayor prestación ⟹ Menor prestación

+ **Clasificaciones adicionales** para clases $B1_{ca}$, $B2_{ca}$, C_{ca} y D_{ca}

Producción de humo
s1a s1b s1 s2 s3

Gotas inflamadas
d0 d1 d2

Acidez
a1 a2 a3

Comprobaciones de cumplimiento

1. Verificar el marcado CE en el embalaje (rollo, caja o bobina) o en la documentación adjunta.



2. Consultar la Declaración de Prestaciones (DoP) en el Portal CPR.



DESCÁRGATE LA DOP
(declaración de prestaciones)
https://es.prysmiangroup.com/dop

3. Verificar el marcado de la prestación en cubierta.

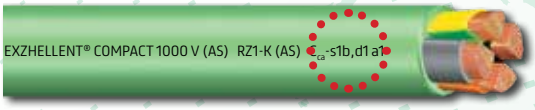

Índice de cables

Baja Tensión

	ECO CABLE	Designación	Clase CPR	Págs.
EXZHELLENT® Class 500 V (AS)	●	ES05Z1-K TYPE 2 (AS)	C_{ca}-s1b,d1,a1	8 a 9
EXZHELLENT® Class 750 V (AS)	●	H07Z1-K TYPE 2 (AS)	C_{ca}-s1b,d1,a1	10 a 11
EXZHELLENT® Class TRIFACIL (AS)	●	H07Z1-K TYPE 2 (AS)	C_{ca}-s1b,d1,a1	12 a 13
EXZHELLENT® Compact 1000 V (AS)	●	RZ1-K (AS)	C_{ca}-s1b,d1,a1	14 a 18
EXZHELLENT® Class SOLAR		H1Z2Z2-K	E_{ca}	19 a 21
EXZHELLENT® MOVIL		H07ZZ-F	-	22 a 23
EXZHELLENT® 1000 V CONTROL (AS)	●	RZ1-K (AS)	C_{ca}-s1b,d1,a1	24 a 25
EXZHELLENT® Class AL (AS)	●	RZ1 AL (AS) / LXZ1 (frt, zh)	C_{ca}-s1b,d1,a1	26 a 27
AFUMEX® Class ATEX (AS)	●	RZ1MZ1 - K (AS)	C_{ca}-s1a,d1,a1	28 a 31
SEGURFOC®-331 Class (AS+)	●	mRZ1-K (AS+)	C_{ca}-s1b,d1,a1	32 a 33
SEGURFOC® Class ALARMAS (AS+)		SOZ1-K (AS+)	C_{ca}-s1b,d1,a1	34a 35
GENLIS®-R Class		H05V-U / H07V-U / H07V-R	E_{ca}	36 a 37
GENLIS®-F Class		H05V-K /H07V-K	E_{ca}	38 a 39
ENERGY® Class		RV-K / FXV	E_{ca}	40 a 43
ENERGY® Class RV		RV / XV	E_{ca}	44 a 47
BIGGFLEX® Class		H05VV-F	E_{ca}	48 a 49
MOVILFLEX®-110 Class		VV-F	E_{ca}	50 a 51
PLASTIGRON® Class		VV-K	E_{ca}	52 a 54
AEROPREX® Class RZ Al		RZ Al / LXS	F_{ca}	55 a 56
AEROPREX® Class RZ Cu		RZ Cu / XS	F_{ca}	57 a 58
HARMOHNY® Class		XZ1 (S) Al	E_{ca}	59 a 60
HARMOHNY® ALL GROUND®	●	XZ1 (S) Al	E_{ca}	61 a 62

Índice de cables

Especiales (BT)

	ECO CABLE	Designación	Clase CPR	Págs.
ARMIGRON®-F Class (multiconductor)		RVFV / XAV / LXAV	E_{ca}	64 a 66
ARMIGRON®-F Class (unipolar)		RVFAV / LX1AV / X1AV	E_{ca}	67 a 68
ARMIGRON®-F Class Al		LSVAV	E_{ca}	69 a 70
FLEXTREME® MAX		H07RN-F / DN-F	E_{ca}	71 a 75
DATAX® LiYCY CPRO		LiYCY	E_{ca}	76 a 77
BLINDEX® PROTECH 500 V (AS)	●	Z1C4Z1-K (AS)	C_{ca}-s1b,d1,a1	78 a 79
BLINDEX® PROTECH 1000 V (AS)	●	Z1C4Z1-K (AS)	C_{ca}-s1b,d1,a1	80 a 81
AFUMEX® Class VARINET RZ1C4OZ1-K VFD 1kV (AS)	●	RZ1C4OZ1-K (AS)	C_{ca}-s1b,d1,a1	82 a 83
GENFIRE® FR950		07Z-R-M	-	84 a 85
TRI-RATED Class		V 105 °C	E_{ca}	86 a 87
CABLE PARA PROTECCIÓN CATÓDICA Class		-	E_{ca}	88 a 89

Media Tensión

	Designación	Clase CPR	Págs.
VULPREN® Class	HEPRZ1 AL	F_{ca}	91 a 93
HERSATENE® Class	RHZ1-OL AL	F_{ca}	94 a 96
HERSATENE® Class	RH5Z1-OL AL	F_{ca}	97 a 99
HERSATENE® Class	RHZ1-2OL AL	F_{ca}	100 a 102
HERSATENE®-FOC Class (S)	RHZ1-OL AL (S)	E_{ca}	103 a 105
HERSATENE®-FOC Class (S)	RH5Z1-OL AL (S)	E_{ca}	106 a 108
HERSATENE®-FOC Class (S)	RHZ1-2OL AL (S)	E_{ca}	109 a 111
EXZHELLENT® Class (AS) ●	HEPRZ1 AL (AS)	C_{ca}-s1b,d2,a1	112 a 114
EXZHELLENT® Class (AS) ●	RHZ1-OL AL (AS)	C_{ca}-s1b,d2,a1	115 a 117
EXZHELLENT® Class (AS) ●	RHZ1-2OL AL (AS)	C_{ca}-s1b,d2,a1	118 a 120
CABLE ARMADO UNIPOLAR	-	F_{ca} E_{ca} C_{ca}-s1b,d2,a1	121
CABLE ARMADO TRIPOLAR	-	F_{ca} E_{ca} C_{ca}-s3,d2,a3	122

Cables para Media Tensión



General Cable

Prysmian Group

VULPREN® Class

HEPRZ1 AL

12/20 (24) kV y 18/30 (36) kV

CPR
F_{ca}

class VULPREN

NORMAS

CONSTRUCCIÓN
IBERDROLA NI 56.43.01
UNE-HD 620-9E

REACCIÓN AL FUEGO
UNE-EN 60754-1; IEC 60754-1
UNE-EN 60754-2; IEC 60754-2
NF C 20-453

CLASIFICACIÓN CPR

DOP 000014
Clase **F_{ca}**

CONSTRUCCIÓN

1. CONDUCTOR
Aluminio de clase 2 según UNE-EN 60228.

2. PANTALLA SOBRE CONDUCTOR
Semiconductor extruido.

3. AISLAMIENTO
Etileno-propileno de alto módulo
105 °C (HEPR).

4. PANTALLA SOBRE AISLAMIENTO
Semiconductor extruido separable en frío.

5. PANTALLA METÁLICA
Hilos de cobre con cinta.

6. CUBIERTA EXTERNA
Poliolefina tipo DMZ1.
Se puede fabricar con clase E_{ca}
bajo demanda (cubierta DMZ2).
Color rojo.

APLICACIONES

Puede instalarse al aire, en bandejas
o enterrado directamente o bajo tubo.

Cubierta resistente
a la abrasión y al desgarro.

Fácil deslizamiento.

Libre de halógenos.

Resistencia a los rayos UVA
(HD 605 S3 y UNE 211605).

Temperatura máxima del conductor: 105°C.
Temperatura ambiente mínima de servicio:
-25 °C.

CERTIFICACIONES

AENOR CABLE ELÉCTRICO

NORMALIZADO POR

IBERDROLA





DESCÁRGATE LA DOP
(declaración de prestaciones)
https://es.prysmiangroup.com/dop

N° DoP 000014

VULPREN® Class

HEPRZ1 AL

12/20 (24) kV y 18/30 (36) kV

CPR F_{ca}

class VULPREN

CARACTERÍSTICAS FÍSICAS Y ELÉCTRICAS

12/20 (24) kV

Sección conductor Al / pantalla Cu (mm²)	Diámetro nominal sobre aislamiento (1) (mm)	Diametro nominal exterior (1) (mm)	Peso (1) (kg/km)	Radio mínimo de curvatura (1) (mm)	Intensidad máx. admisible al aire (2) (A)	Intensidad máx. admisible directamente enterrado (2) (A)	Intensidad máx. admisible bajo tubo enterrado (2) (A)	Resistencia en corriente contínua a 20 °C (Ω /km)	Resistencia en corriente alterna a 105 °C (Ω /km)	Reactancia a 50 Hz (Ω /km)	Capacidad (μ F/km)
1X50/16*	18,0	26,2	790	393	180	145	135	0,641	0,847	0,134	0,216
1X95/16	20,8	29,0	980	435	275	215	200	0,320	0,430	0,119	0,281
1X150/16*	23,5	32,0	1205	480	360	275	255	0,206	0,277	0,112	0,329
1X240/16*	27,6	36,1	1570	542	495	365	345	0,125	0,168	0,103	0,402
1X400/16*	32,8	41,4	2115	621	660	470	450	0,0778	0,105	0,097	0,480
1X500/16	36,2	44,5	2625	668	775	540	515	0,0605	0,089	0,093	0,558
1X630/16*	40,8	49,4	3075	741	905	615	590	0,0469	0,066	0,091	0,602

18/30 (36) kV

Sección conductor Al / pantalla Cu (mm²)	Diámetro nominal sobre aislamiento (1) (mm)	Diametro nominal exterior (1) (mm)	Peso (1) (kg/km)	Radio mínimo de curvatura (1) (mm)	Intensidad máx. admisible al aire (2) (A)	Intensidad máx. admisible directamente enterrado (2) (A)	Intensidad máx. admisible bajo tubo enterrado (2) (A)	Resistencia en corriente contínua a 20 °C (Ω /km)	Resistencia en corriente alterna a 105 °C (Ω /km)	Reactancia a 50 Hz (Ω /km)	Capacidad (μ F/km)
1X50/16*	25,0	33,0	1205	495	180	145	135	0,641	0,847	0,155	0,147
1X95/16	25,6	33,9	1323	509	275	215	200	0,320	0,430	0,128	0,202
1X150/25*	27,2	36,6	1520	549	360	275	255	0,206	0,277	0,120	0,247
1X240/25*	31,4	40,6	1905	609	495	365	345	0,125	0,168	0,110	0,299
1X400/25*	36,4	45,7	2480	686	660	470	450	0,0778	0,105	0,103	0,360
1X500/25	40,0	49,4	3000	741	775	540	515	0,0605	0,089	0,099	0,400
1X630/25*	44,7	54,1	3525	812	905	615	590	0,0469	0,066	0,096	0,446

*Secciones normalizadas por Iberdrola.

(1) Valores sujetos a variación en función de las tolerancias dimensionales.

(2) Intensidades máximas admisibles de acuerdo con UNE 211435 Tabla A.3.2. e ITC-LAT 06 del RLAT. Tres conductores dispuestos en trébol, al aire a 40 °C (a la sombra). Enterrados a 25 °C, 1 m de profundidad y 1,5 K·m/W.

VULPREN® Class

HEPRZ1 AL

12/20 (24) kV y 18/30 (36) kV

CPR
F_{ca}

class VULPREN

CARACTERÍSTICAS FÍSICAS Y ELÉCTRICAS

A continuación figuran los valores homopolares de resistencia reactancia y capacidad, útiles para cálculo de sistemas trifásicos desequilibrados.
En las tablas anteriores figuran los valores de secuencia directa e inversa, que son coincidentes entre sí.

12/20 (24) kV

Sección conductor Al / pantalla Cu (mm²)	Resistencia homopolar Ro (Ω/km)	Reactancia homopolar Xo (Ω/km)	Capacidad homopolar Co (μF/km)
1X50/16*	1,484	0,517	0,216
1X95/16	1,159	0,506	0,281
1X150/16*	1,041	0,501	0,329
1X240/16*	0,955	0,496	0,402
1X400/16*	0,902	0,494	0,480
1X500/16	0,882	0,493	0,538
1X630/16*	0,864	0,492	0,602

18/30 (36) kV

Sección conductor Al / pantalla Cu (mm²)	Resistencia homopolar Ro (Ω/km)	Reactancia homopolar Xo (Ω/km)	Capacidad homopolar Co (μF/km)
1X50/16*	1,475	0,54	0,147
1X95/16	1,153	0,521	0,202
1X150/25*	0,822	0,278	0,247
1X240/25*	0,740	0,271	0,299
1X400/25*	0,691	0,267	0,360
1X500/25	0,672	0,265	0,400
1X630/25*	0,658	0,264	0,446

*Secciones normalizadas por Iberdrola.

Todos los valores, salvo las capacidades que son independientes de la colocación, se han obtenido considerando cables al tresbolillo en contacto y pantallas conectadas entre sí y a tierra en ambos extremos.

Valores homopolares

Mercados y productos



CONSTRUCCIÓN

Mercados: residencial, comercial, servicios

Productos: cables para edificación, cables para infraestructuras, cables para uso móvil, cables industriales



ENERGÍA

Mercados: generación, transporte, distribución,

Productos: cables subterráneos, sables para subestaciones, cables para edificios, enlaces submarinos



INDUSTRIAL

Mercados: industria alimentaria, automatización, sistemas de potabilización y tratamiento de aguas residuales, industria papelera...

Productos: cables de control, cables de instrumentación, cables de energía, cables de automatización,cables para uso móvil y temporales



ENERGÍA RENOVABLE

Mercados: solar, hidraulico, eólico

Productos: cables para cuadros, cables FV, cables para aerogeneradores, cables de sistemas colectores



TELECOMUNICACIONES

Mercados: operadoras de telecomunicaciones y redes, compañías de telefonía móvil y fija, distribuidores especializados de material eléctrico

Productos: cables de fibra óptica monotubo/ multi tubo, cables auto sustentados ADSS/OPGW, cableado estructurado de cobre



TRANSPORTE

Mercados: industria del automóvil, maquinaria agrícola, infraestructuras ferroviarias, camiones industriales pesados, transporte colectivo de personas, recarga de vehículo eléctrico

Productos: cables para tráfico de material rodante, cables de señalización, comunicaciones de datos a bordo, cables de control y alimentación, cables de batería, cables primarios, productos para vehículos eléctricos, mazos y conjuntos de cables



NUCLEAR

Mercados: centrales nucleares

Productos: potencia, instrumentación, control



INDUSTRIA DEL PETROLEO, GAS Y PETROQUÍMICA

Mercados: exploración y producción, refinado/ distribución y transporte/almacenamiento

Productos: cables para offshore, cables submarinos, cables para onshore



MINERÍA

Mercados: aplicaciones en superficie y subterráneas

Productos: cables uso móvil y de arrastre para minería, cables de alimentación para minería



MARINA

Mercados: astilleros y otros buques flotantes

Productos: cables de energía, control, instrumentación y comunicación



SECTOR MILITAR

Mercados: tierra, mar, aire

Productos: cables de comunicación (cobre y fibra), cables de energía, cables de alimentación tierra a buque, mazos y conjuntos de cables

Toda la información contenida en este catálogo constituye únicamente una guía para la selección de productos y se considera fiable. Los requisitos normativos indicados han sido validados mediante ensayos tipo sobre muestras seleccionadas cubriendo el rango de productos. Los posibles errores de impresión serán subsanados en posteriores ediciones del presente catálogo. Antes de proceder a su publicación, General Cable ha tomado las debidas precauciones a fin de garantizar la exactitud de todas las especificaciones de los productos que aquí se detallan. No obstante, dichas especificaciones podrán ser modificadas sin previo aviso.

Cable App

Tu **nueva** aplicación

Calcula la mejor sección de cable, técnica y económica, para cada tipo de instalación

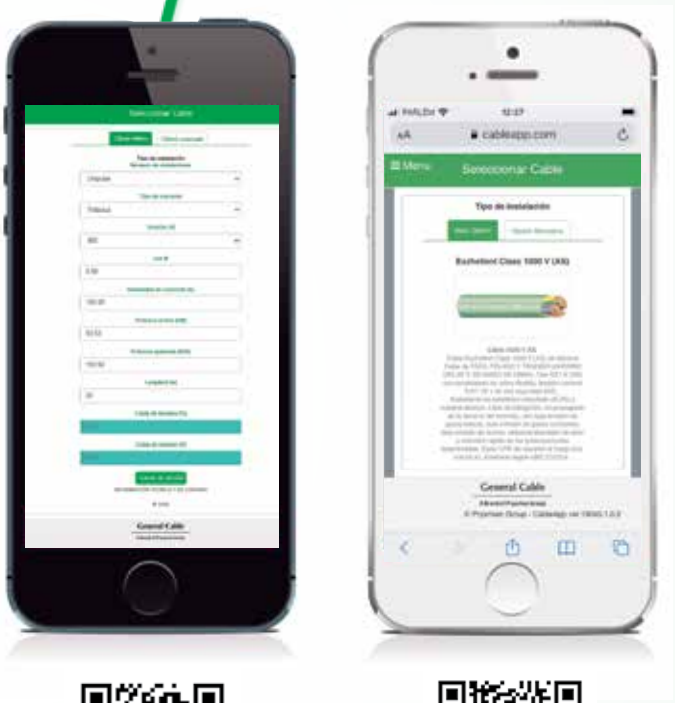

EFICIENTE

Configuración **fiable** de tus **instalaciones eléctricas**

SOSTENIBLE

Calcula el **ahorro anual de emisiones de CO_2**

RENTABLE

Calcula el **ahorro total de energía en la factura eléctrica**

ÚTIL

Máxima **usabilidad y facilidad de uso**

Para **smartphone, tablet y PC**

Consíguelo en el App Store

Disponible en Google play

cableapp.com

CATÁLOGO ACTUALIZADO Y SEGÚN CPR

CE CPR COMPLIANT UNE-EN 50575: 2014/A1: 2016

Notas

General Cable

A brand of Prysmian Group

NORDESTE

Andorra, Aragón, Baleares y Cataluña
Polígono Industrial Masia del Notari / C-15 / km 2
08800 Vilanova i la Geltrú - Barcelona
+34 932 713 140

CENTRO

Ciudad Real, Guadalajara, Madrid y Toledo
C/ Maudes, 51 - 8ª planta
28003 Madrid
+34 932 713 140

Ávila, Burgos, León, Palencia, Salamanca,Segovia, Valladolid y Zamora
+34 609 154 594
+34 932 713 140

ANDALUCÍA

Almería, Cádiz, Córdoba, Extremadura, Granada, Huelva, Jaén y Sevilla
C/ Almutamid, 6
Edificio Vega 1 - 1ª Planta - Módulo 206C
41900 Camas - SEVILLA
+34 932 713 140

Málaga
+34 626 014 918

NORTE

Coruña, Pontevedra, Lugo, Orense,
Asturias, Cantabria, Vizcaya, Guipúzcoa,
Alava, Navarra, Rioja, Soria
Juan de Ajuriaguerra, 26
48009 Bilbao
+34 932 713 140

LEVANTE

Albacete, Comunidad Valenciana, Cuenca y Murcia
C/26 (nº 100)
Edificio Center, 26 - Despacho 30
46470 Catarroja - VALENCIA
+34 932 713 140

Publicación de Grupo General Cable Sistemas, S.L.
Edición: octubre 2023.

Reservados todos los derechos.

No se permite la reproducción total ni parcial de esta obra, ni su incorporación a un sistema informático, ni su transmisión en cualquier forma o por cualquier medio (electrónico, mecánico, fotocopia, grabación u otros) sin autorización previa y por escrito de los titulares del copyright. La infracción de dichos derechos puede constituir un delito contra la propiedad intelectual.

Grupo General Cable Sistemas, S.L. se reserva el derecho de modificar en cualquier momento, sin compromiso alguno y sin previo aviso, las especificaciones y otros datos técnicos de este catálogo.

Impreso en España.

NUEVO TELÉFONO DE ATENCIÓN
93 271 31 40

servicio.clientes@generalcable.es

Visita nuestra web:

generalcable.es

Anejo Nº 6

Hoja de Datos Electrolizador Neptune V

ESTUDIO Y VIABILIDAD DE PRODUCCIÓN DE HIDRÓGENO VERDE A PARTIR DE UN MIX ENERGÉTICO RENOVABLE PARA DESCARBONIZACIÓN DE FLOTA DE AUTOBUSES URBANOS EN VALLADOLID

NEPTUNE V

OUTPERFORMING. COMPACT. COMPETITIVE.

Best-in-class NEPTUNE V 5MW Plug & Play electrolyser for mid-scale projects.

Designed against the highest safety and quality standards, and building on the learnings from our operational electrolysers around the world, NEPTUNE V is our brand-new full scope 5MW containerised electrolyser plant, engineered to outperform.

Engineered to be safe, cost competitive and reliable.

CONTACT OUR SALES TEAM

sales@itm-power.com

EUR 4,995,000*

GBP 4,350,000*

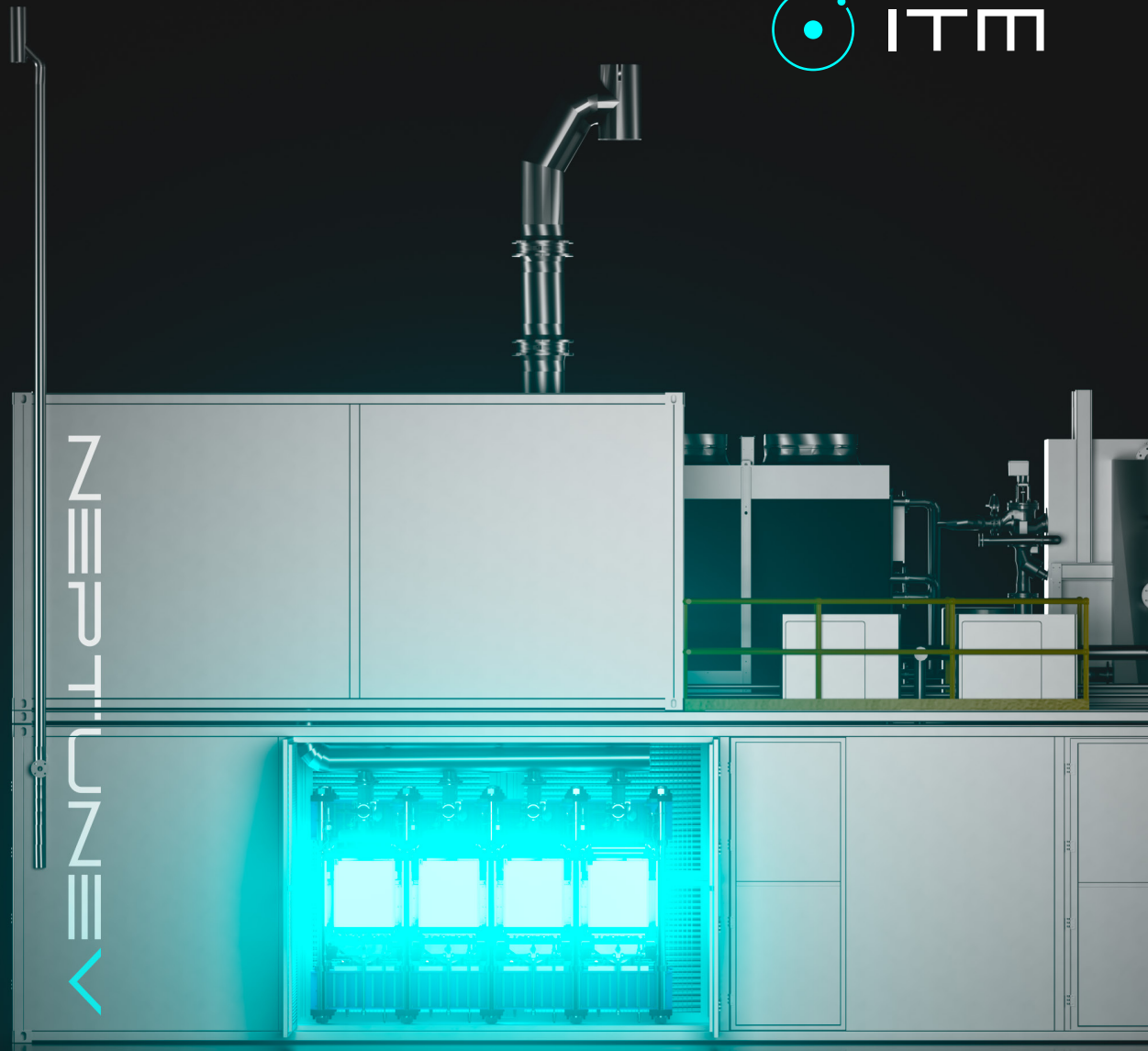

REFINERIES · AMMONIA · METHANOL · TRANSPORT · SEMICONDUCTORS · STEEL · STORAGE · MINING · HEATING · ELECTRICITY

** prices are based on ITM's Standard T&C's*

NEPTUNE V: PROCESS FLOW & SPECIFICATIONS

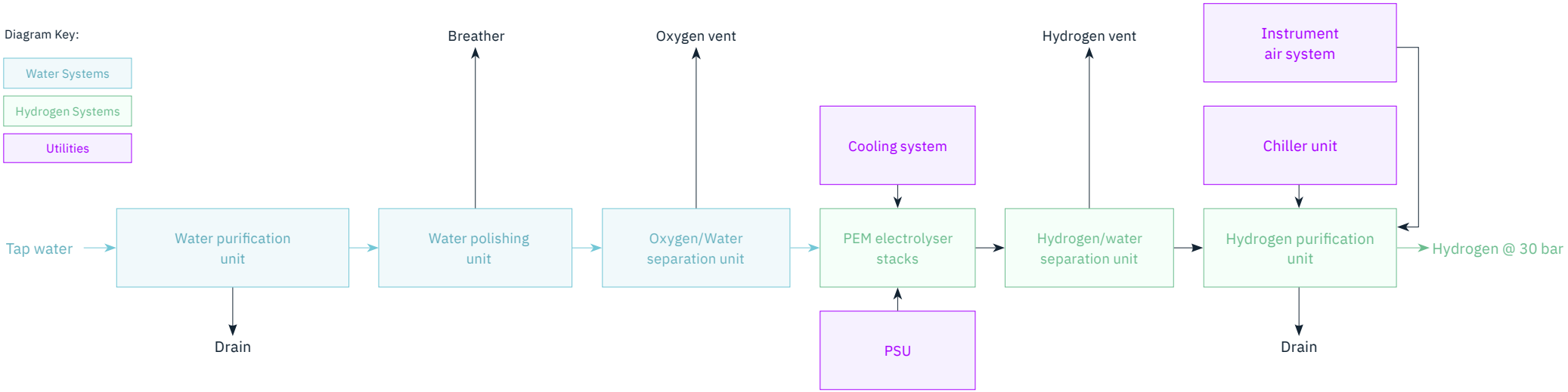

TECHNOLOGY	PEM
NUMBER OF STACKS	8
CAPACITY	5MW
AC POWER CONSUMPTION	55.9 kWh/kg*
SYSTEM FOOTPRINT	Approx. 96m² optimised layout***
OPERATING RANGE	12.5–100%
INPUT WATER PURITY	Potable Water**

H2 PRODUCTION	90 kg/hr
H2 OUTPUT PRESSURE	30 bar(g)
H2 OUTPUT PURITY	<5ppm H2O, <5ppm O2 (EN 17124 & ISO 14687)
AMBIENT TEMPERATURE RANGE	-20°C to + 45°C
MODULATION	10% per second ramp up 50% per second ramp down
COMPLIANCE	CE

* This is the full system (water purification, stack, and BOP) energy consumption at beginning of life

** Input water to the system, prior to purification

***Not including hazardous areas

NEPTUNE V: PLUG & PLAY

AIR BLAST COOLER

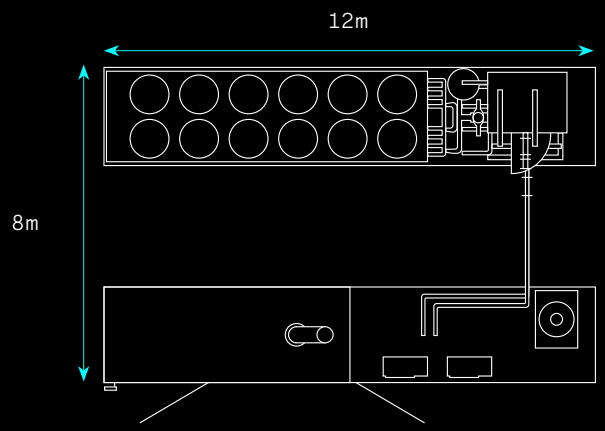

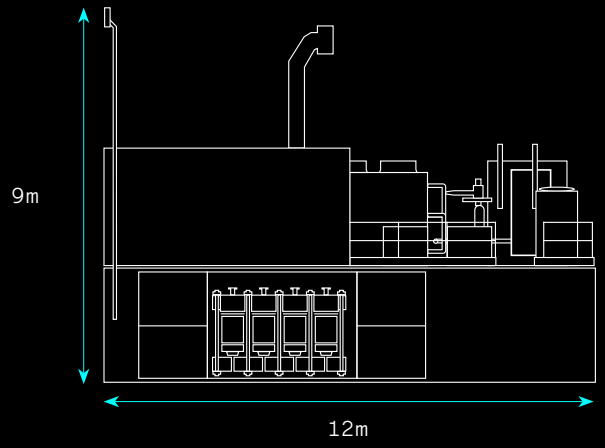

ELECTROLYSER

SCOPE OF SUPPLY

- Water purification unit
- Water polishing unit
- PEM stacks and skids
- Process water cooling system - adiabatic cooler
- Instrument air system
- Hydrogen purification unit
- Container temperature control
- Containerised power supply unit including; MV trafo, dual-rectifier and cooling system, specifically designed to match our electrolyser
- Siemens S7 PLC, integrated safety
- Local HMI for plant control and diagnostics
- Fully autonomous operating software system, able to connect to external SCADA or DCS
- All process and electrical interconnections within the container
- Factory Acceptance Test (FAT) before shipment

NEPTUNE V: PLUG & PLAY

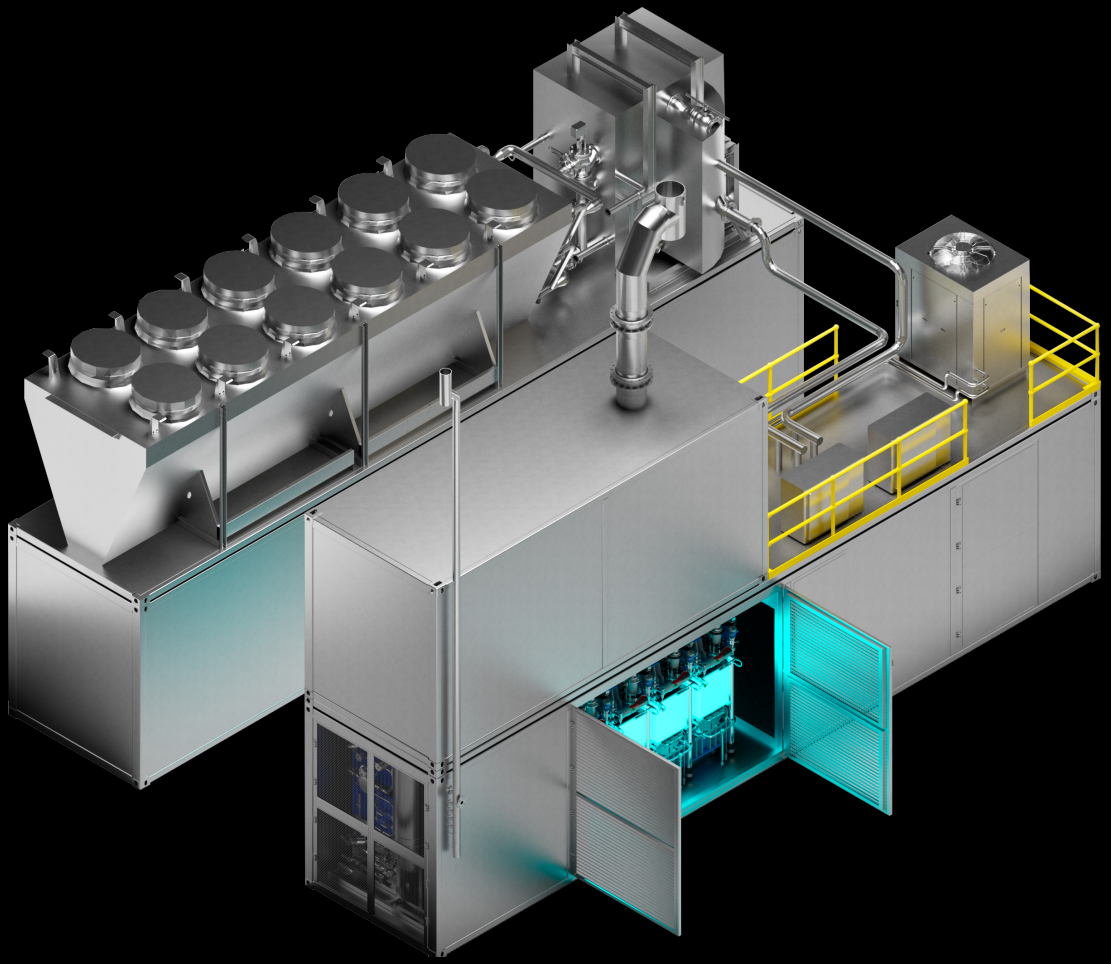

Find out the detailed scope of supply and more on our product page

CONTACT OUR SALES TEAM

sales@itm-power.com

itm-power.com/products/neptune-5

Anejo Nº 7

Análisis Económico y de Rentabilidad Detallado

ESTUDIO Y VIABILIDAD DE PRODUCCIÓN DE HIDRÓGENO VERDE A PARTIR DE UN MIX ENERGÉTICO RENOVABLE PARA DESCARBONIZACIÓN DE FLOTA DE AUTOBUSES URBANOS EN VALLADOLID

Caso 1. Escenario base

			Tasa de Pérdida de Rendimiento Anual del Electrolizador	Tasa de Incremento de Demanda de H2	Producción Anual (kgH2/año)	Precio de Venta (€/kgH2)	Ratio Act.Precio			Tasa Incremental			
			0,50%	1,20%	109456,2	5,85	2,00%			1,50%			
Año	**Inversiones (€)**	**Subvención (€)**	**Pérdida de Rendimiento**	**Incremento de Demanda**	**Producción Estimada**	**Venta Base (€)**	**Precio de Venta (€)**	**Precio de venta (€)**	**O&M Base (€)**	**Incremento O&M Anual**	**Operación y Mantenimiento (€)**	**Flujo de Caja Anual (€)**	**Flujo de Caja a Origen (€)**
0	18598662											-18598662	-18598662
1		5579599	1,00	1,00	109456	640319	5,85	640319	416400	1,00	416400	5803517	-12795145
2			1,00	1,01	110216	644763	5,97	657658	424728	1,02	431099	226559	-12568586
3			0,99	1,02	110204	644692	6,09	670738	433223	1,03	446317	224421	-12344165
4			0,99	1,02	110186	644590	6,21	684044	441887	1,05	462072	221972	-12122193
5			0,98	1,03	110163	644455	6,33	697579	450725	1,06	478383	219196	-11902996
6			0,98	1,03	110135	644289	6,46	711347	459739	1,08	495270	216077	-11686919
7			0,97	1,04	110101	644090	6,59	725350	468934	1,09	512753	212597	-11474322
8			0,97	1,04	110061	643860	6,72	739592	478313	1,11	530853	208740	-11265582
9			0,96	1,05	110017	643597	6,85	754077	487879	1,13	549592	204485	-11061098
10			0,96	1,05	109966	643303	6,99	768806	497637	1,14	568993	199814	-10861284
11			0,95	1,06	109910	642976	7,13	783784	507589	1,16	589078	194706	-10666578
12			0,95	1,06	109849	642618	7,27	799014	517741	1,18	609873	189142	-10477436
13			0,94	1,07	109782	642227	7,42	814499	528096	1,20	631401	183098	-10294338
14			0,94	1,07	109710	641804	7,57	830242	538658	1,21	653689	176553	-10117785
15			0,93	1,08	109632	641350	7,72	846247	549431	1,23	676765	169483	-9948303
16			0,93	1,08	109549	640863	7,87	862517	560420	1,25	700655	161863	-9786440
17			0,92	1,09	109461	640344	8,03	879056	571628	1,27	725388	153668	-9632772
18			0,92	1,09	109366	639794	8,19	895866	583061	1,29	750994	144872	-9487900
19			0,91	1,10	109267	639211	8,36	912951	594722	1,31	777504	135447	-9352453
20			0,91	1,10	109162	638596	8,52	930314	606616	1,33	804950	125364	-9227089
21			0,90	1,11	109051	637950	8,69	947960	618748	1,35	833365	114595	-9112494
22			0,90	1,11	108935	637271	8,87	965890	631123	1,37	862782	103108	-9009386
23			0,89	1,12	108814	636560	9,04	984109	643746	1,39	893238	90870	-8918516
24			0,89	1,12	108687	635817	9,22	1002620	656621	1,41	924770	77850	-8840666
25			0,88	1,13	108554	635043	9,41	1021426	669753	1,43	957414	64012	-8776654
26			0,88	1,13	108416	634236	9,60	1040531	683148	1,45	991211	49320	-8727334
27			0,87	1,14	108273	633397	9,79	1059938	696811	1,47	1026201	33737	-8693596
28			0,87	1,14	108124	632526	9,99	1079650	710748	1,49	1062426	17225	-8676372
29			0,86	1,15	107970	631623	10,18	1099671	724962	1,52	1099929	-258	-8676630
30			0,86	1,15	107810	630688	10,39	1120005	739462	1,54	1138757	-18752	-8695382
								25925800			**21602118**		

Caso 2. Escenario con 30% de subvención y precio del hidrógeno que hace el proyecto rentable (VAN≈0)

			Tasa de Pérdida de Rendimiento Anual del Electrolizador	Tasa de Incremento de Demanda de H2	Producción Anual (kgH2/año)	Precio de Venta (€/kgH2)	Ratio Act.Precio			Tasa Incremental			
			0,50%	1,20%	109456,2	10,90	2,00%			1,50%			
Año	Inversiones (€)	Subvención (€)	Pérdida de Rendimiento	Incremento de Demanda	Producción Estimada	Venta Base (€)	Precio de Venta (€)	Precio de venta (€)	O&M Base (€)	Incremento O&M Anual	Operación y Mantenimiento (€)	Flujo de Caja Anual (€)	Flujo de Caja a Origen (€)
0	18598662											-18598662	-18598662
1		5579599	1,00	1,00	109456	1193073	10,90	1193073	416400	1,00	416400	6356271	-12242391
2			1,00	1,01	110216	1201353	11,12	1225380	424728	1,02	431099	794281	-11448110
3			0,99	1,02	110204	1201221	11,34	1249751	433223	1,03	446317	803434	-10644676
4			0,99	1,02	110186	1201030	11,57	1274543	441887	1,05	462072	812471	-9832205
5			0,98	1,03	110163	1200780	11,80	1299763	450725	1,06	478383	821380	-9010825
6			0,98	1,03	110135	1200470	12,03	1325415	459739	1,08	495270	830146	-8180679
7			0,97	1,04	110101	1200100	12,28	1351507	468934	1,09	512753	838755	-7341925
8			0,97	1,04	110061	1199670	12,52	1378044	478313	1,11	530853	847191	-6494734
9			0,96	1,05	110017	1199181	12,77	1405032	487879	1,13	549592	855440	-5639294
10			0,96	1,05	109966	1198632	13,03	1432477	497637	1,14	568993	863484	-4775810
11			0,95	1,06	109910	1198024	13,29	1460384	507589	1,16	589078	871306	-3904504
12			0,95	1,06	109849	1197356	13,55	1488761	517741	1,18	609873	878889	-3025615
13			0,94	1,07	109782	1196628	13,82	1517614	528096	1,20	631401	886213	-2139402
14			0,94	1,07	109710	1195841	14,10	1546947	538658	1,21	653689	893258	-1246145
15			0,93	1,08	109632	1194993	14,38	1576768	549431	1,23	676765	900004	-346141
16			0,93	1,08	109549	1194087	14,67	1607083	560420	1,25	700655	906429	560288
17			0,92	1,09	109461	1193120	14,96	1637898	571628	1,27	725388	912511	1472799
18			0,92	1,09	109366	1192094	15,26	1669220	583061	1,29	750994	918226	2391025
19			0,91	1,10	109267	1191009	15,57	1701054	594722	1,31	777504	923550	3314575
20			0,91	1,10	109162	1189863	15,88	1733406	606616	1,33	804950	928456	4243031
21			0,90	1,11	109051	1188658	16,20	1766284	618748	1,35	833365	932919	5175950
22			0,90	1,11	108935	1187394	16,52	1799692	631123	1,37	862782	936910	6112860
23			0,89	1,12	108814	1186069	16,85	1833639	643746	1,39	893238	940400	7053260
24			0,89	1,12	108687	1184685	17,19	1868129	656621	1,41	924770	943360	7996620
25			0,88	1,13	108554	1183242	17,53	1903170	669753	1,43	957414	945756	8942376
26			0,88	1,13	108416	1181738	17,88	1938767	683148	1,45	991211	947556	9889932
27			0,87	1,14	108273	1180175	18,24	1974927	696811	1,47	1026201	948726	10838658
28			0,87	1,14	108124	1178553	18,61	2011656	710748	1,49	1062426	949230	11787889
29			0,86	1,15	107970	1176871	18,98	2048960	724962	1,52	1099929	949031	12736920
30			0,86	1,15	107810	1175129	19,36	2086846	739462	1,54	1138757	948090	13685009
								48306191			**21602118**		



VAN	60.876,76 €
TIR	5,037%
Payback Compuesto	17,76
Relación Coste Beneficio	1,74

Caso 3. Escenario base SIN subvenciones

			Tasa de Pérdida de Rendimiento Anual del Electrolizador	Tasa de Incremento de Demanda de H2	Producción Anual (kgH2/año)	Precio de Venta (€/kgH2)	Ratio Act.Precio			Tasa Incremental			
			0,50%	1,20%	109456,2	5,85	2,00%			1,50%			
Año	**Inversiones (€)**	**Subvención (€)**	**Pérdida de Rendimiento**	**Incremento de Demanda**	**Producción Estimada**	**Venta Base (€)**	**Precio de Venta (€)**	**Precio de venta (€)**	**O&M Base (€)**	**Incremento O&M Anual**	**Operación y Mantenimiento (€)**	**Flujo de Caja Anual (€)**	**Flujo de Caja a Origen (€)**
0	18598662											-18598662	-18598662
1			1,00	1,00	109456	640319	5,85	640319	416400	1,00	416400	223919	-18374743
2			1,00	1,01	110216	644763	5,97	657658	424728	1,02	431099	226559	-18148184
3			0,99	1,02	110204	644692	6,09	670738	433223	1,03	446317	224421	-17923763
4			0,99	1,02	110186	644590	6,21	684044	441887	1,05	462072	221972	-17701791
5			0,98	1,03	110163	644455	6,33	697579	450725	1,06	478383	219196	-17482595
6			0,98	1,03	110135	644289	6,46	711347	459739	1,08	495270	216077	-17266518
7			0,97	1,04	110101	644090	6,59	725350	468934	1,09	512753	212597	-17053920
8			0,97	1,04	110061	643860	6,72	739592	478313	1,11	530853	208740	-16845181
9			0,96	1,05	110017	643597	6,85	754077	487879	1,13	549592	204485	-16640696
10			0,96	1,05	109966	643303	6,99	768806	497637	1,14	568993	199814	-16440883
11			0,95	1,06	109910	642976	7,13	783784	507589	1,16	589078	194706	-16246176
12			0,95	1,06	109849	642618	7,27	799014	517741	1,18	609873	189142	-16057035
13			0,94	1,07	109782	642227	7,42	814499	528096	1,20	631401	183098	-15873937
14			0,94	1,07	109710	641804	7,57	830242	538658	1,21	653689	176553	-15697384
15			0,93	1,08	109632	641350	7,72	846247	549431	1,23	676765	169483	-15527901
16			0,93	1,08	109549	640863	7,87	862517	560420	1,25	700655	161863	-15366039
17			0,92	1,09	109461	640344	8,03	879056	571628	1,27	725388	153668	-15212371
18			0,92	1,09	109366	639794	8,19	895866	583061	1,29	750994	144872	-15067499
19			0,91	1,10	109267	639211	8,36	912951	594722	1,31	777504	135447	-14932052
20			0,91	1,10	109162	638596	8,52	930314	606616	1,33	804950	125364	-14806687
21			0,90	1,11	109051	637950	8,69	947960	618748	1,35	833365	114595	-14692092
22			0,90	1,11	108935	637271	8,87	965890	631123	1,37	862782	103108	-14588985
23			0,89	1,12	108814	636560	9,04	984109	643746	1,39	893238	90870	-14498114
24			0,89	1,12	108687	635817	9,22	1002620	656621	1,41	924770	77850	-14420264
25			0,88	1,13	108554	635043	9,41	1021426	669753	1,43	957414	64012	-14356252
26			0,88	1,13	108416	634236	9,60	1040531	683148	1,45	991211	49320	-14306932
27			0,87	1,14	108273	633397	9,79	1059938	696811	1,47	1026201	33737	-14273195
28			0,87	1,14	108124	632526	9,99	1079650	710748	1,49	1062426	17225	-14255970
29			0,86	1,15	107970	631623	10,18	1099671	724962	1,52	1099929	-258	-14256228
30			0,86	1,15	107810	630688	10,39	1120005	739462	1,54	1138757	-18752	-14274980
								25925800			**21602118**		

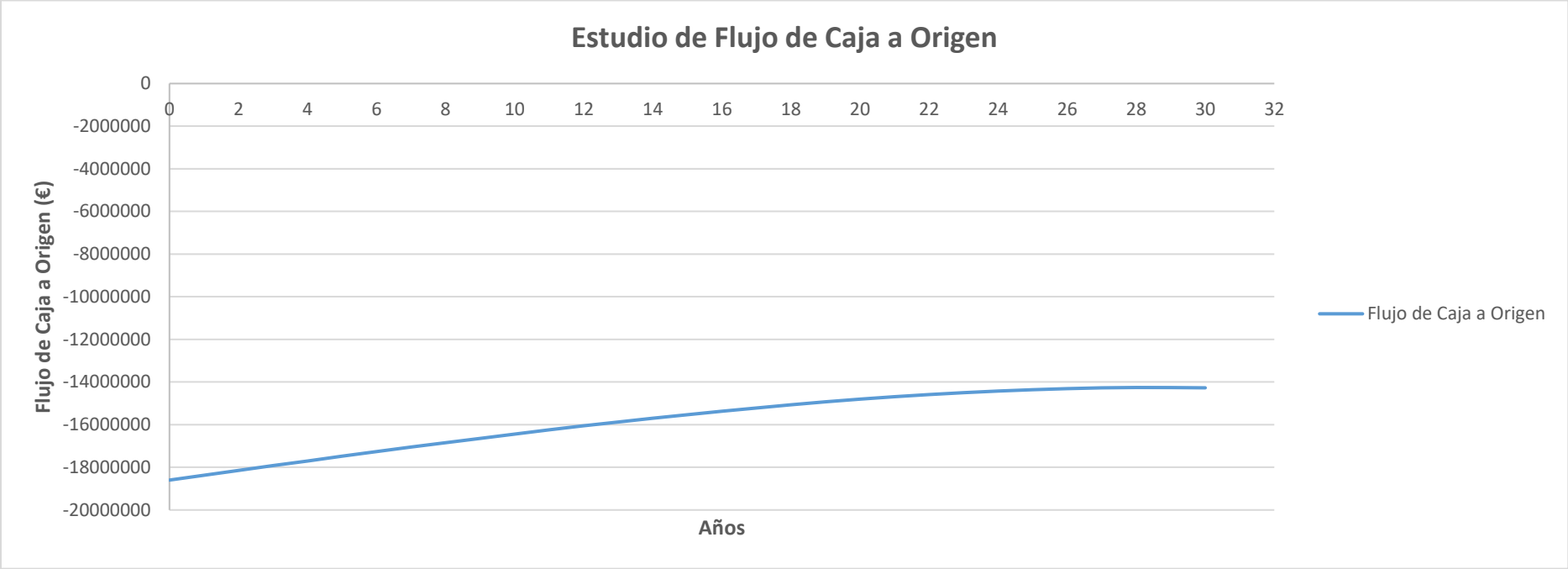

VAN	-15.962.483,82 €
TIR	-10,001%
Payback Compuesto	61,77
Relación Coste Beneficio	0,23

Caso 4. Escenario sin subvenciones y precio del hidrógeno que hace el proyecto rentable (VAN≈0)

			Tasa de Pérdida de Rendimiento Anual del Electrolizador	Tasa de Incremento de Demanda de H2	Producción Anual (kgH2/año)	Precio de Venta (€/kgH2)	Ratio Act.Precio			Tasa Incremental			
			0,50%	1,20%	109456,2	13,38	2,00%			1,50%			
Año	**Inversiones (€)**	**Subvención (€)**	**Pérdida de Rendimiento**	**Incremento de Demanda**	**Producción Estimada**	**Venta Base (€)**	**Precio de Venta (€)**	**Precio de venta (€)**	**O&M Base (€)**	**Incremento O&M Anual**	**Operación y Mantenimiento (€)**	**Flujo de Caja Anual (€)**	**Flujo de Caja a Origen (€)**
0	18598662											-18598662	-18598662
1			1,00	1,00	109456	1464524	13,38	1464524	416400	1,00	416400	1048124	-17550538
2			1,00	1,01	110216	1474688	13,65	1504182	424728	1,02	431099	1073083	-16477455
3			0,99	1,02	110204	1474527	13,92	1534098	433223	1,03	446317	1087781	-15389674
4			0,99	1,02	110186	1474292	14,20	1564531	441887	1,05	462072	1102459	-14287215
5			0,98	1,03	110163	1473985	14,48	1595489	450725	1,06	478383	1117106	-13170110
6			0,98	1,03	110135	1473604	14,77	1626978	459739	1,08	495270	1131708	-12038401
7			0,97	1,04	110101	1473150	15,07	1659006	468934	1,09	512753	1146253	-10892148
8			0,97	1,04	110061	1472623	15,37	1691581	478313	1,11	530853	1160728	-9731420
9			0,96	1,05	110017	1472022	15,68	1724709	487879	1,13	549592	1175117	-8556304
10			0,96	1,05	109966	1471349	15,99	1758398	497637	1,14	568993	1189405	-7366898
11			0,95	1,06	109910	1470602	16,31	1792655	507589	1,16	589078	1203577	-6163321
12			0,95	1,06	109849	1469782	16,64	1827489	517741	1,18	609873	1217616	-4945705
13			0,94	1,07	109782	1468888	16,97	1862905	528096	1,20	631401	1231504	-3714201
14			0,94	1,07	109710	1467922	17,31	1898913	538658	1,21	653689	1245224	-2468977
15			0,93	1,08	109632	1466882	17,65	1935519	549431	1,23	676765	1258755	-1210222
16			0,93	1,08	109549	1465769	18,01	1972732	560420	1,25	700655	1272077	61855
17			0,92	1,09	109461	1464583	18,37	2010558	571628	1,27	725388	1285170	1347025
18			0,92	1,09	109366	1463323	18,74	2049006	583061	1,29	750994	1298012	2645037
19			0,91	1,10	109267	1461990	19,11	2088082	594722	1,31	777504	1310578	3955615
20			0,91	1,10	109162	1460584	19,49	2127796	606616	1,33	804950	1322846	5278461
21			0,90	1,11	109051	1459105	19,88	2168154	618748	1,35	833365	1334789	6613250
22			0,90	1,11	108935	1457553	20,28	2209164	631123	1,37	862782	1346381	7959632
23			0,89	1,12	108814	1455927	20,69	2250834	643746	1,39	893238	1357595	9317227
24			0,89	1,12	108687	1454228	21,10	2293172	656621	1,41	924770	1368402	10685629
25			0,88	1,13	108554	1452456	21,52	2336185	669753	1,43	957414	1378771	12064400
26			0,88	1,13	108416	1450611	21,95	2379881	683148	1,45	991211	1388670	13453070
27			0,87	1,14	108273	1448692	22,39	2424268	696811	1,47	1026201	1398068	14851137
28			0,87	1,14	108124	1446701	22,84	2469354	710748	1,49	1062426	1406928	16258066
29			0,86	1,15	107970	1444636	23,29	2515146	724962	1,52	1099929	1415217	17673282
30			0,86	1,15	107810	1442498	23,76	2561652	739462	1,54	1138757	1422895	19096177
								59296957			**21602118**		

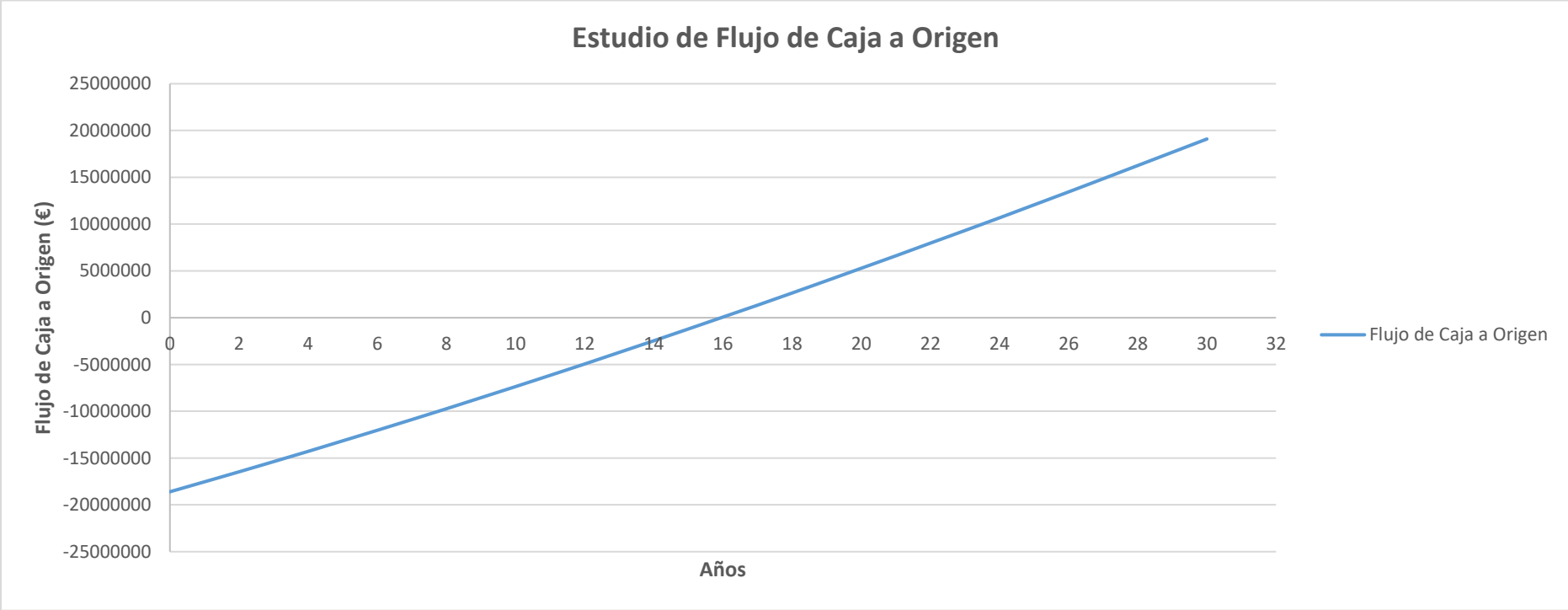

VAN	6.271,17 €
TIR	5,003%
Payback Compuesto	13,16
Relación Coste Beneficio	2,03

Anejo Nº 8

Comparativa de Gasto Económico Anual Hidrógeno vs Diésel

ESTUDIO Y VIABILIDAD DE PRODUCCIÓN DE HIDRÓGENO VERDE A PARTIR DE UN MIX ENERGÉTICO RENOVABLE PARA DESCARBONIZACIÓN DE FLOTA DE AUTOBUSES URBANOS EN VALLADOLID

Tipo Autobús	Número Autobuses	Consumo/100km	Gasto Económico €/100km	Km Anuales	Consumo Anual	Gasto Económico Anual
Diésel	28	53,87 litros	61,12 €	1.563.161	842.075 litros	955.326 €
Hidrógeno	28	7 kg	40,95 €	1.563.161	109.456 kg	640.319 €

